KALFIRE
FIREPLACES

Closed gas fires

DON'T COMPROMISE.

EN

DON'T COMPROMISE.

Don’t compromise

At Kalfire, we accept nothing but the best. The closed gas fires that we have been developing since 1981 are the result of this constant quest for perfection in design, technology and performance – indeed in every aspect of what we do. We are frequently singled out for introducing innovative technology and cutting-edge style.
Our patented innovations such as the Prestige gas burner and the Natural Spark Generator (NSG) succeed in simulating a real wood fire to an astounding degree. When compared to open wood-burning fires, Kalfire gas fires rise to the challenge like no others.

We hope this brochure will inspire as well as inform you about our models. As you will see, the possibilities are limitless to create a fire that reflects your individuality and your taste. The range of options we offer will allow you to design the gas fire that best enhances your home’s interior and meets your needs. Our Kalfire distributors are there to help guide you in your choices, but the final decision is always yours. Be true to yourself, and never compromise. We don’t.

Beijko van Melick
Kalfire Managing Director

DON’T COMPROMISE.

Cornerstones

Our products, our services and our business culture rest on five key values. Everything we do and everything we design is based on these five fundamental concepts, which allow us to stay ahead and retain our position as market leader.

The experience of something exceptional is one of the main reasons to choose a fireplace. A natural fire is a proven source of relaxation. Kalfire gas fires are internationally reputed for their incredibly realistic play of flames.

Individuality means having the widest choice and the most design freedom possible. As a fire takes pride of place in your living area, it needs to fit your unique requirements and personal taste – you shouldn't have to compromise.

Ease of use is a key factor in taking pleasure in something. Our fires are designed to be intuitive to use and extremely easy to clean.

Durability & sustainability go without saying. Our gas and wood-burning fires are equipped with innovative combustion technology that is not only durable, but environmental and economical.

Expertise is imperative for us and for our network of distributors, who we have carefully chosen and trained. Our product designers work ceaselessly to offer you pure innovation and cutting-edge performance. We are proud to be the market leader and all our efforts are focused on staying there.

Contents

Foreword by Beijko van Melick 5
Cornerstones 6

EXPERIENCE

A fire that creates atmosphere, whatever the season 9
An impressively realistic play of flames 10
Realistic sparks with the Natural Spark Generator 13
A simulated bed of embers 13
An optimal view of the fire 15

INDIVIDUALITY

A gas fire personalized to your taste 16
2,000 variations of style and comfort 19
Seamless integration 21
Types of interior 23

EASE OF USE

Control at the touch of a button 24
The iMatch app 26
Ease of maintenance 29

DURABILITY & SUSTAINABILITY

A 40% reduction in gas consumption 30
Optimal and clean performance 33

EXPERTISE

Often imitated, never equalled 34
Kalfire distributors share our passion 35

PRODUCT RANGE 36

Front model: adapts to any interior
GP range: KALFIRE GP60/59F 42
KALFIRE GP60/79F 44
KALFIRE GP75/59F 46
KALFIRE GP105/59F 48
KALFIRE GP105/79F 50
G range: KALFIRE G60/48F 52
KALFIRE G80/48F 54
KALFIRE G100/41F 56
KALFIRE G120/41F 58
KALFIRE G160/41F 60

Corner model: a view from two angles
GP range: KALFIRE GP65/55C 64
KALFIRE GP65/75C 66
KALFIRE GP80/55C 68
KALFIRE GP110/55C 70
KALFIRE GP110/75C 72
G range: KALFIRE G65/44C 74
KALFIRE G85/44C 76
KALFIRE G105/37C 78
KALFIRE G125/37C 80
KALFIRE G165/37C 82

Three-sided model: maximum visibility of the fire
GP range: KALFIRE GP70/55S 84
KALFIRE GP70/75S 86
KALFIRE GP85/55S 88
KALFIRE GP115/55S 90
KALFIRE GP115/75S 92
G range: KALFIRE G70/44S 94
KALFIRE G90/44S 96
KALFIRE G110/37S 98
KALFIRE G130/37S 100
KALFIRE G170/37S 102

Room divider and tunnel model: a convivial way to divide a room
GP range: KALFIRE GP80/54T 104
KALFIRE GP85/50R 106
KALFIRE GP110/59T 108
KALFIRE GP115/55R 110
KALFIRE GP110/79T 112
KALFIRE GP115/75R 114

Product overview 116
Dimensional drawings 118

Colophon

This brochure was produced by Kalfire BV.
Concept, design and editorial: DimCoppen, Tegelen
Photos: Zebra fotostudio's, Venlo
Interior furnishings: Berden Meubelen, Venlo

A fire that creates atmosphere, whatever the season

A burning fire in a fireplace typically evokes a cold winter's day. Traditionally, fireplaces have been viewed mainly as a source of heat, but today their use is more commonly to create a convivial atmosphere in an interior. Kalfire closed gas fires are often used principally in this way. There is nothing more soothing than a softly crackling fire burning in the hearth, and nothing more relaxing than gazing into the flames. The presence of a fireplace or a contemporarygas fire makes a space more convivial, even in the summer.

The size or style of a room is not an obstacle – our closed gas fires are suitable for any type of interior. We design our models with perfection in mind and never compromise on quality or style.

EXPERIENCE

An impressively realistic play of flames

Choose your fire

What would work better in your living space, a high blazing fire or a long bed of flames? Kalfire has developed innovative burners adapted to either situation.

Prestige burner (Kalfire GP-range)
The patented Prestige burner is integrated directly within highly realistic ceramic logs, which are stacked in a pyramid. This results in high, blazing flames that leap directly from the logs, giving an unparalleled impression of a wood fire.

3D burner (Kalfire G-range)
Like the Prestige burner, this innovation was designed and developed by Kalfire. It allows an elongated, horizontal fireplace (up to 170 cm in width) that suits contemporary interiors perfectly. A closed gas fireplace equipped with a 3D burner produces flames that are virtually indistinguishable from those of a wood fire. Fireplaces with a 3D burner are supplied with a ceramic log set as standard, but it is also possible to choose an exclusive log set or a bed of white, beige or grey stones or cryptonite.

Prestige burner

3D burner

Realistic sparks with the Natural Spark Generator

Kalfire is constantly striving for innovation and seeking perfection. Our patented designs have allowed us to take closed gas fires to another level, making us a benchmark in the market. One of the latest innovations developed by our R&D team is the **Natural Spark Generator** (NSG). This technology is available as an option in all our gas fires that feature a Prestige burner. The Natural Spark Generator creates small sparks that escape from the flames and burn out slowly, resulting in an amazingly realistic simulation of a wood fire.

A simulated bed of embers

As an option in our closed gas fires with a Prestige burner, a hybrid function can be added to include **LED lighting** in the fire bed. When this function is activated, the lighting intensity fluctuates continuously, perfectly imitating a bed of embers in a wood-burning fireplace. The lighting has three different programmes that can be configured as desired.

A further advantage of this feature is that it allows a convivial atmosphere to be created during warmer periods when heat is not required, without having to switch on the fire itself. This is another example of how Kalfire fires are designed to improve your living space all year round. Even when it is not providing heat, your fire can emanate the warmth of a real fire with its realistic logs and bed of embers created with LED lighting.

EXPERIENCE

KALFIRE GP105/79F with brick-effect interior

An optimal view of the fire

Kalfire's closed gas fires stand out for their clean, streamlined design, free of a distracting metal frame around the glass. This offers a clear view of the fire from all angles.

A gas fire personalized to your taste

A gas fire is an important feature of your living area. It is both an object of design as well as a creator of atmosphere – particularly if it is able to realistically create the illusion of an open wood fire. Have you just bought a new home or perhaps are renovating your current home? Is an architect helping you design or choose a gas fire or do you have your own ideas? Kalfire offers lots of options to personalize each gas fire to your taste.

INDIVIDUALITY

2,000 variations of style and comfort

Front model - KALFIRE G60/48F

Corner model - KALFIRE G105/37C

3-sided model - KALFIRE G90/44S

Room divider - KALFIRE GP85/50R

We offer a wide selection of latest-generation closed gas fire models in a range of sizes. In all, no less than 2,000 variations of these models can be created. And thanks to our focus on innovation, the number of possibilities we provide is continually increasing.

The first decision is to choose the basic format of your gas fire: a front-facing model, a corner model, a three-sided model, or a double-sided tunnel or room-dividing model. From there, we offer a wide range of options that allow you to give a personal touch to your choice. Based on your taste and specific preferences, a Kalfire distributor can explain the type of burner (3D or Prestige burner) in the different models, and the various options you can choose for the frame, the rear panel, the hearth furnishings, and more. In this way, step by step you can design a unique fire that corresponds exactly to your wishes.

INDIVIDUALITY

KALFIRE GP110/75C

Seamless integration

Our closed gas fires blend in perfectly in any interior and offer an optimal view of the flames. The hearth that extends from the fire, often in stone, extends all the way to the frameless glass panel. The interior side panels extend seamlessly to the wall surrounding the fire. You can also opt for a rear panel that extends outside of the fire. In this case, no metallic frame is visible. This results in a fire with clean, minimalist lines that blends seamlessly into the surroundings, enhancing the impression of an open fireplace.

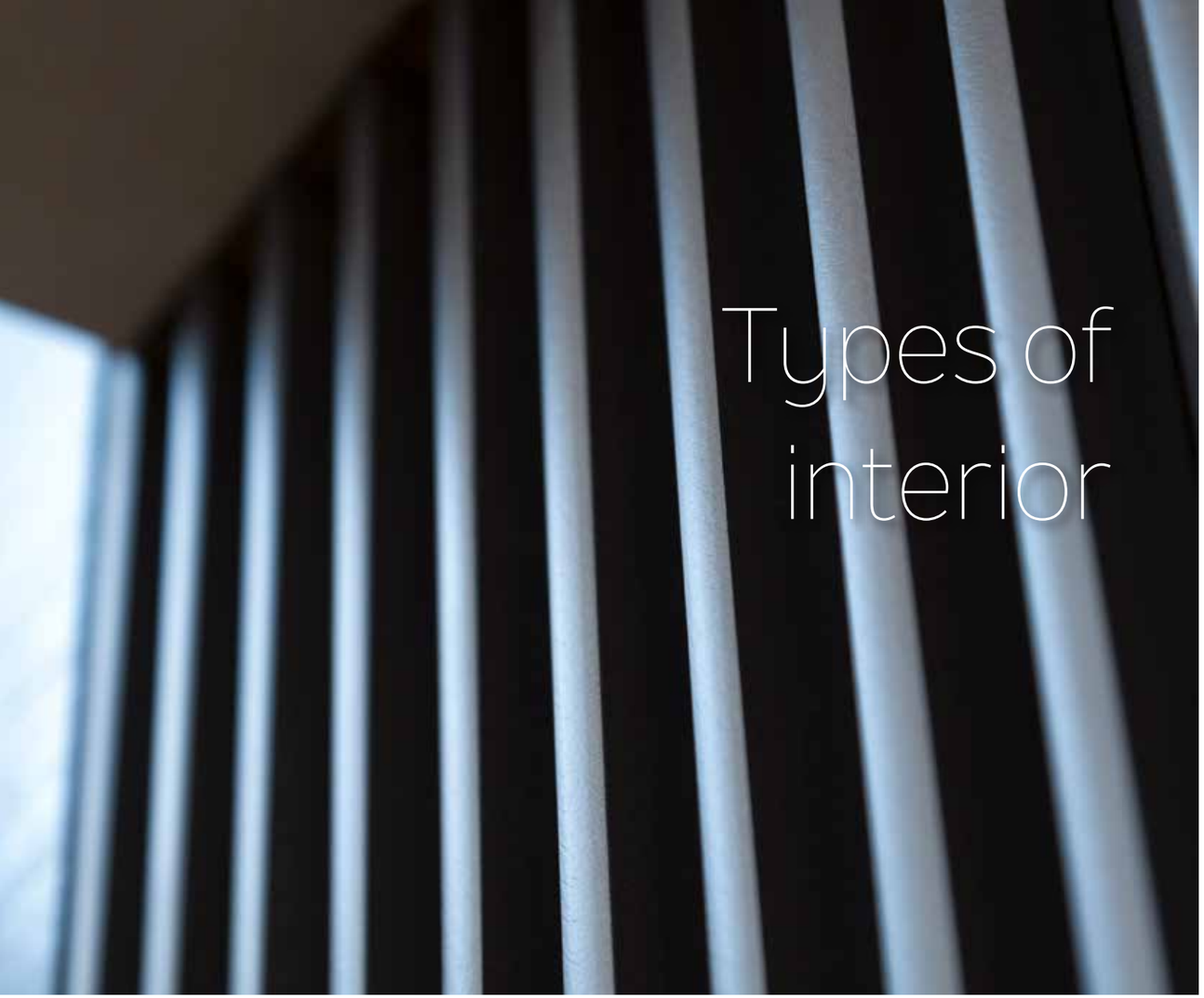

Types of interior

Flat (1 piece) (front model, tunnel model, room divider)

Flat (3-sections) (corner model, 3-sided model)

Black ceramic glass

Design (ridged surface)

The interior of a fireplace is a key element of its style, impacting its appearance even when it is not in use. As a backdrop to the fire, it can provide contrast or even reflect and amplify the play of flames. Kalfire closed gas fires offer a choice of three different types of interior: the standard is a minimalist interior with a flat surface; alternatively, as an option you can choose black ceramic glass or a ridged design.

Brick effect: rear panel, hearth step and vertical passepartouts (GP105/79F, GP75/59F)

Boom brickwork effect: rear panel, hearth step and vertical passepartouts (GP75/59F)

Clay (GP60/79F)

Besides these three standard interiors, several special interiors are available for specific products:

- Brick effect: rear panel, hearth step and vertical passepartouts (GP105/79F, GP75/59F)
- Boom brickwork effect: rear panel, hearth step and vertical passepartouts (GP75/59F)
- Clay (GP60/79F)

Control at the touch of a button

The **iMatch remote control** supplied as standard with every model allows you to control your gas fire with ease. At the touch of a button you can turn the fire on or off or adjust the flame height. There are eight standard settings, plus a special ECO setting; this energy-saving setting automatically makes the flame level fluctuate, which considerably reduces gas consumption.

KALFIRE GP70/75S with NSG

The iMatch app

Our gas fires also have the option of including a receiver that works in tandem with a special Kalfire application that can be downloaded free from online Apple or Google (Android) app stores. This allows you to control your gas fire from your **smartphone or tablet**. If your home has a home automation (domotics) system, control of your gas fire can be integrated in this.

Easy Door System

To make cleaning your gas fire as simple as possible, our models feature the **Easy Door System**. Cleaning the glass of a fire has never been so easy. This unique system allows the glass panel to be removed in four simple steps. No special tools are required. After cleaning, the door can be replaced just as easily.

EASE OF USE

A 40% reduction in gas consumption

For years, Kalfire has been a benchmark in sustainable energy by virtue of its fires' low energy consumption. The ECO setting is a prime example. In addition to the eight standard flame height settings, our fires include a ninth, energy-saving option. When the ECO setting is selected on the iMatch remote control or the iMatch app, an electronically operated valve alternately increases and reduces the gas supply to the fire following a sine wave pattern. This creates the appearance of naturally fluctuating flames as in a wood-burning fire.

This continuous variation in flame play is not only aesthetic, it also significantly decreases the amount of gas consumed – a reduction of up to 40% compared to the highest setting. Our closed gas fires are not just renowned for their contemporary style; they have exceptional performance, complying with the most recent and demanding standards. Kalfire technology gives you the guarantee of a gas fire that is environmentally sustainable, durable and economical.

Optimal and clean performance

During the periodic maintenance visits for your Kalfire gas fire, the installer will check that the flue is functioning correctly and that the combustion of your fire is optimal. During this check, the installer can benefit from the patented measuring points integrated in all our gas fires. These measuring points enable the concentrations of O2 (fresh air) and CO (smoke) to be easily read.
The first value provides information on how the flue is functioning and the second on the quality of combustion. Any malfunctions in the flue can thus be quickly detected, ensuring that the gas fire continues to operate optimally and resulting in environmentally sound performance for many years.

DURABILITY & SUSTAINABILITY

Often imitated, never equalled

Kalfire gas fires are designed and made by our own teams. Our R&D department uses a process of continuous innovation, rapidly developing new ideas and bringing them to market after thorough testing. Many of our groundbreaking innovations have been imitated, but they have never been equalled. It is not by chance that we hold a diverse range of patents for cutting-edge technology such as the Prestige burner and the Natural Spark Generator (NSG).

The colour, glow and height of the flames of our gas fires make them virtually impossible to distinguish from those of a wood-burning fire. This achievement is due to the ceaseless work of our R&D team, which has succeeded in creating such a realistic play of flames through its unerring attention to detail. We design the best closed gas fires on the market – with no compromise.

Kalfire distributors share our passion

Our gas fires are available exclusively from our network of distributors, who have been selected with the utmost care. Meticulously trained by Kalfire, they know every aspect of our products down to the smallest detail and share our passion and expertise.

Only a certified Kalfire distributor can install our built-in fires correctly and safely. This will ensure that the fire performs optimally and respects all warranty and safety requirements. Your Kalfire distributor can also help you create the gas fire that meets all your requirements and bears the mark of your individual style. This is our guarantee.

Product range

Glass sizes: gas fires with Prestige burner (GP range)

Glass sizes: gas fires with 3D burner (G range)

Front model

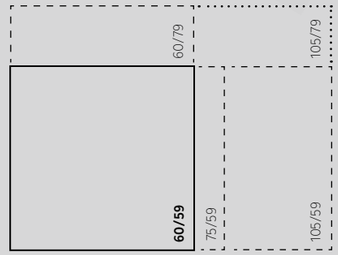

Corner model

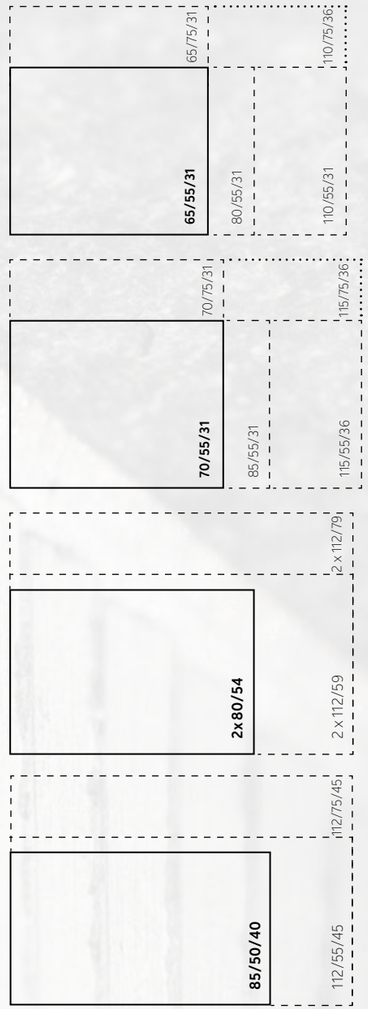

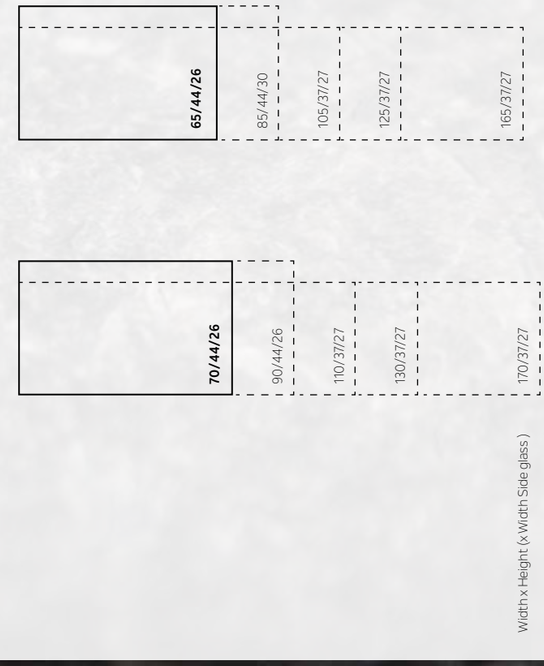

3-sided model

Tunnel model

Room divider model

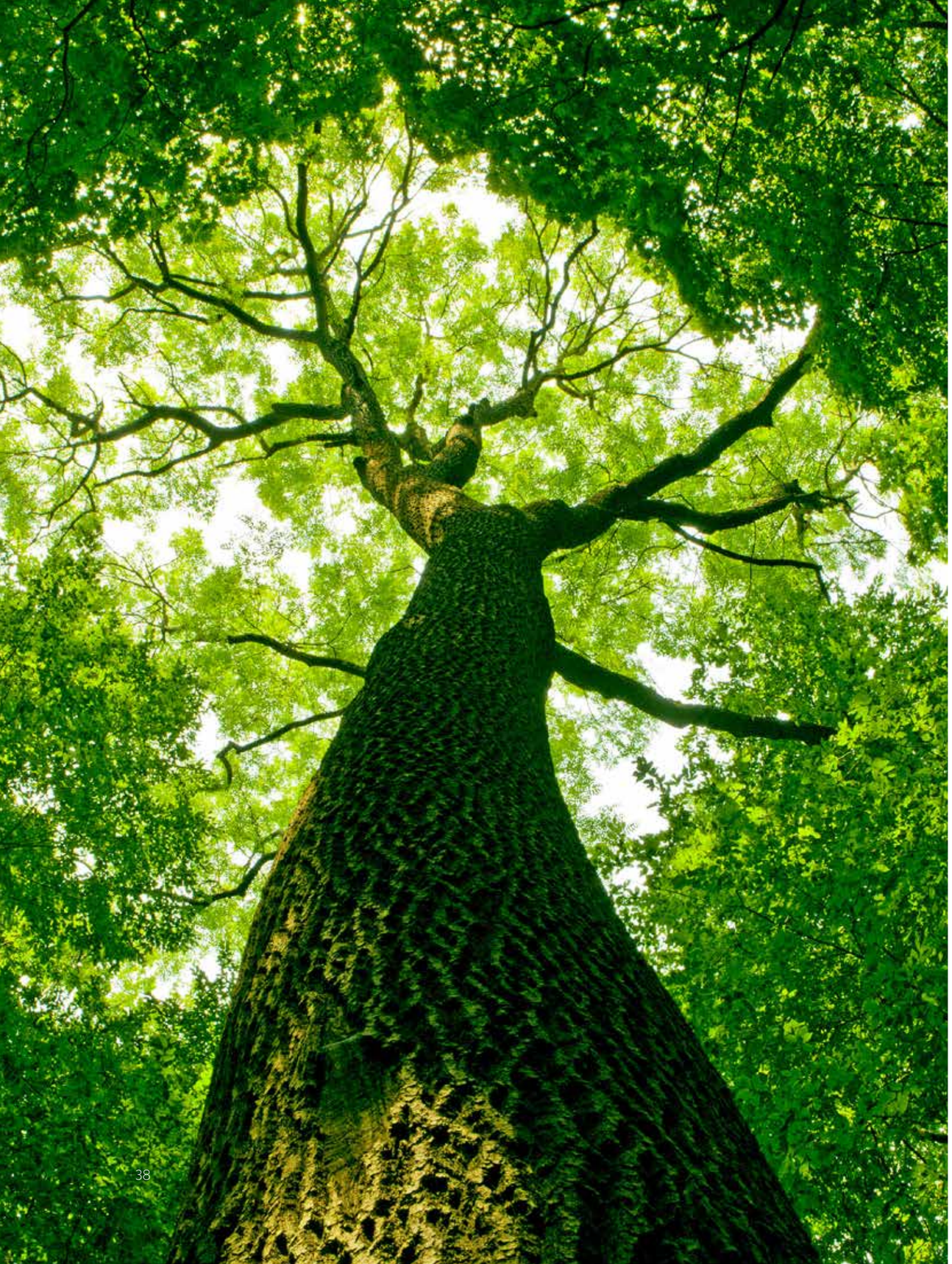

Kalfire gas fireplaces can also be used with propane/bio-propane

All Kalfire gas fireplaces can be connected to a natural gas supply. In situations in which natural gas is not available, propane or bio-propane offer an excellent solution. Almost all Kalfire gas fireplaces can be easily connected to this clean, environmentally friendly energy source. In the following pages, icons indicate the types of fuel that can be used with each fireplace.

PRODUCT RANGE

Front model:

adapts to any interior

KALFIRE GP60/79F with grey clay interior and NSG

GP range

Front model ⊖

A closed gas fire with one front-facing glass panel is called a front model. The Kalfire range includes a large number of front models, with multiple possibilities in size and decorative features. The size of the glass, which can be square or rectangular, can vary between 60 and 160 cm in width. Front models are elegant additions to contemporary settings and are also well-adapted to installation in a fireplace mantel, the style and appearance of which can be chosen according to your taste.

Glass sizes of front models with Prestige burner:

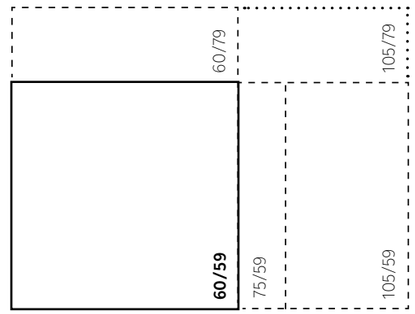

KALFIRE GP60/59F with NSG

natural gas propane bio-propane

GP range

KALFIRE GP60/79F with NSG

Glass sizes of front models with Prestige burner:

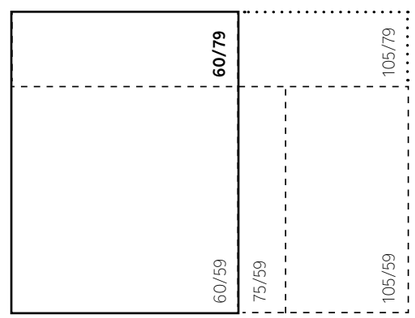

natural gas propane bio-propane

PRODUCT RANGE

KALFIRE GP75/59F

Glass sizes of front models with Prestige burner:

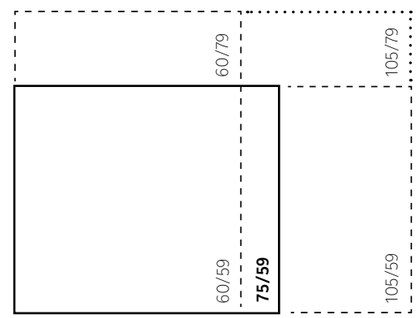

natural gas propane bio-propane

KALFIRE GP105/59F

Glass sizes of front models with Prestige burner:

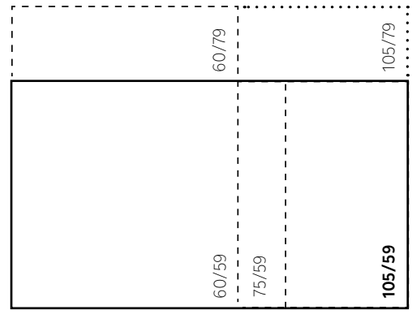

natural gas propane bio-propane

GP range

KALFIRE GP105/79F with brick-effect interior

Glass sizes of front models with Prestige burner:

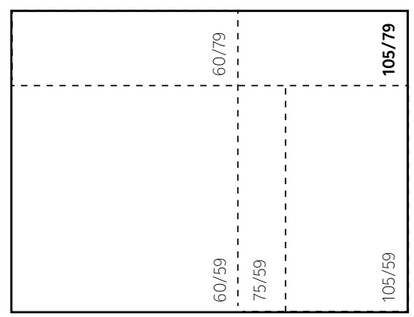

natural gas

KALFIRE G60/48F

Glass sizes of front models with Prestige burner:

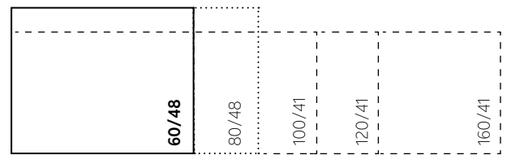

natural gas propane bio-propane

KALFIRE G80/48F

Glass sizes of front models with Prestige burner:

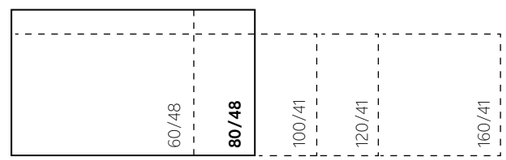

natural gas propane bio-propane

KALFIRE G100/41F

Glass sizes of front models with Prestige burner:

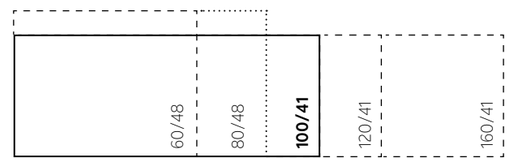

natural gas propane bio-propane

KALFIRE G120/41F

Glass sizes of front models with Prestige burner:

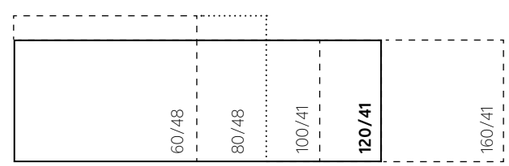

natural gas propane bio-propane

KALFIRE G160/41F

Glass sizes of front models with Prestige burner:

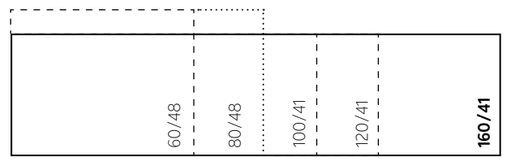

natural gas propane bio-propane

Corner model:

a view from two angles

KALFIRE GP80/55C

natural gas propane bio-propane

GP range

Corner model

Our corner gas fire models offer a view of the fire from two different angles. Kalfire corner models come in a wide range of widths and heights. You can also choose whether you want the glass corner to face to the left or the right. In addition, you can customize your corner model with a flat interior, a ceramic glass interior, or a design interior. These options are also available for other types of Kalfire gas fires.

Glass sizes of corner models with Prestige burner:

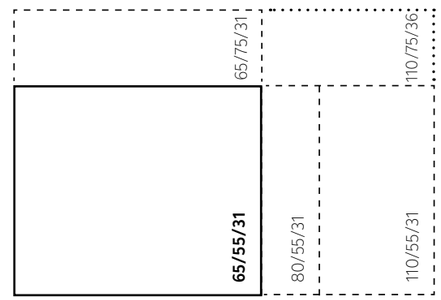

KALFIRE GP65/55C with NSG

natural gas propane bio-propane

KALFIRE GP65/75C with NSG

Glass sizes of corner models with Prestige burner:

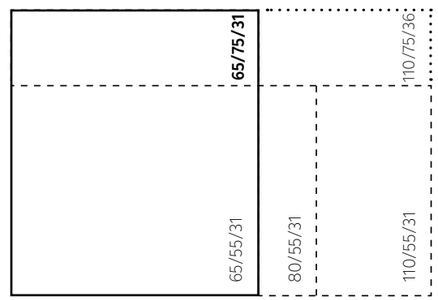

natural gas propane bio-propane

Glass sizes of corner models with Prestige burner:

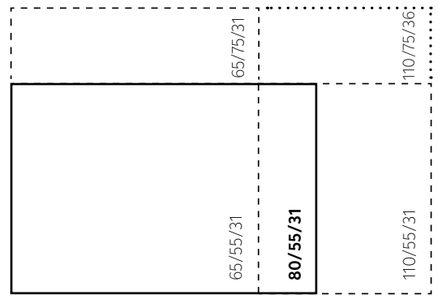

KALFIRE GP80/55C

natural gas propane bio-propane

KALFIRE GP110/55C

Glass sizes of corner models with Prestige burner:

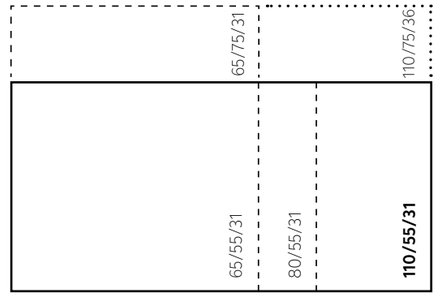

natural gas propane bio-propane

GP range

Glass sizes of corner models with Prestige burner:

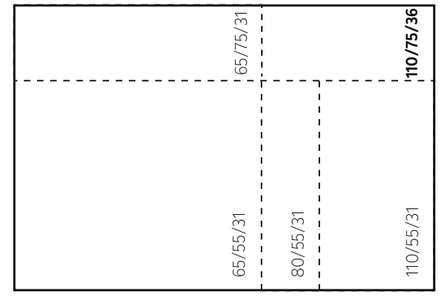

KALFIRE GP110/75C

natural gas

KALFIRE G65/44C

G range

Glass sizes of corner models with Prestige burner:

65/44/26	85/44/30	105/37/27	125/37/27	165/37/27

natural gas propane bio-propane

PRODUCT RANGE

G range

KALFIRE G85/44C

Glass sizes of corner models with Prestige burner:

65/44/26	**85/44/30**	105/37/27	125/37/27	165/37/27

natural gas propane bio-propane

PRODUCT RANGE

KALFIRE G105/37C

Glass sizes of corner models with Prestige burner:

65/44/26	85/44/30	**105/37/27**	125/37/27	165/37/27

natural gas propane bio-propane

G range

KALFIRE G125/37C

Glass sizes of corner models with Prestige burner:

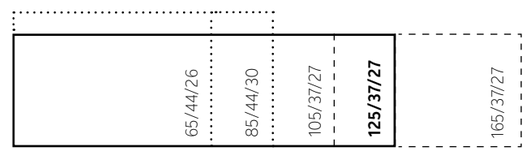

natural gas propane bio-propane

PRODUCT RANGE

G range

KALFIRE G165/37C

Glass sizes of corner models with Prestige burner:

65/44/26	85/44/30	105/37/27	125/37/27	**165/37/27**

natural gas propane bio-propane

PRODUCT RANGE

Three-sided model:

maximum visibility of the fire

Glass sizes of three-sided models with 3D burner:

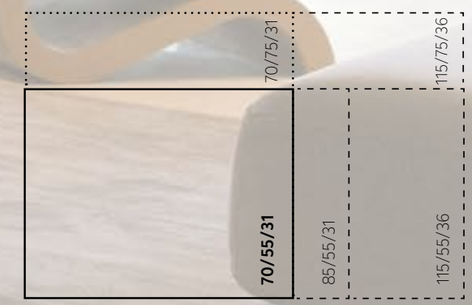

KALFIRE GP70/55S

natural gas propane bio-propane

PRODUCT RANGE

GP range

Three-sided model

As the name indicates, three-sided models are essentially wrapped in glass on three sides. The frameless glass panel bends around the fire, giving an expansive and unimpeded view from three sides. Whatever the style of your interior, the three-sided model always attracts attention, allowing observers to enjoy the realistic play of flames from practically any location in the room. Kalfire offers a large choice of three-sided gas fires.

Glass sizes of three-sided models with 3D burner:

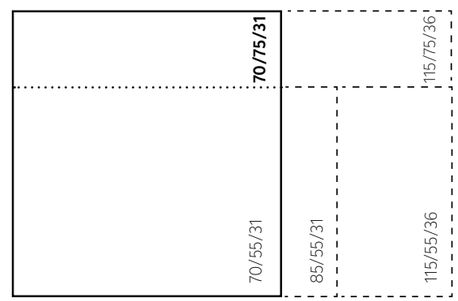

KALFIRE GP70/75S with NSG

natural gas propane bio-propane

Glass sizes of three-sided models with 3D burner:

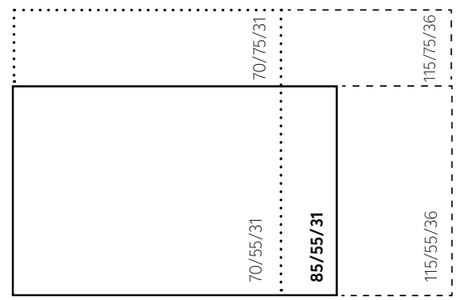

KALFIRE GP85/55S

natural gas propane bio-propane

PRODUCT RANGE

Glass sizes of three-sided models with 3D burner:

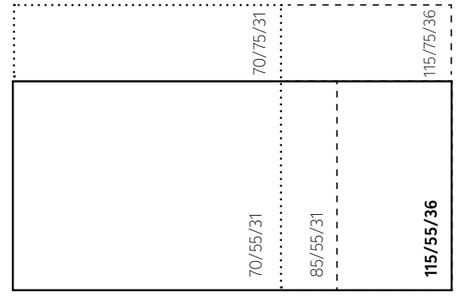

KALFIRE GP115/55S

natural gas propane bio-propane

KALFIRE GP115/75S

Glass sizes of three-sided models with 3D burner:

natural gas

KALFIRE G70/44S

Glass sizes of three-sided models with 3D burner:

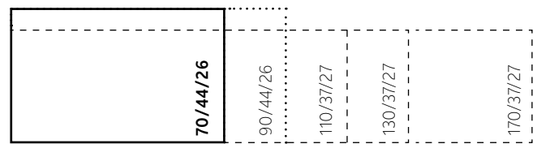

natural gas propane bio-propane

KALFIRE G90/44S

Glass sizes of three-sided models with 3D burner:

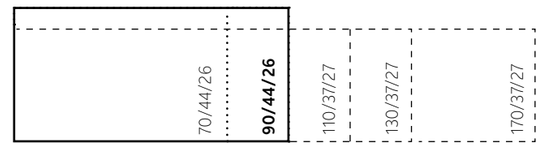

natural gas propane bio-propane

PRODUCT RANGE

Glass sizes of three-sided models with 3D burner:

70/44/26	90/44/26	**110/37/27**	130/37/27	170/37/27

KALFIRE G110/37S

natural gas propane bio-propane

PRODUCT RANGE

KALFIRE G130/37S

Glass sizes of three-sided models with 3D burner:

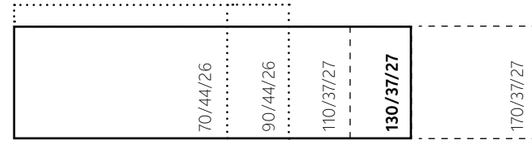

natural gas propane bio-propane

G range

KALFIRE G170/37S

Glass sizes of three-sided models with 3D burner:

70/44/26	90/44/26	110/37/27	130/37/27	**170/37/27**

natural gas propane bio-propane

PRODUCT RANGE

Double-sided & three-sided tunnel models:

a convivial way to divide a room

KALFIRE GP80/54T

Glass sizes of tunnel models with Prestige burner:

natural gas propane bio-propane

PRODUCT RANGE

GP range

Room divider & tunnel models

Double-sided models are transparent tunnels of glass that have taken the market by storm. This is the model for you if you want to observe the attractive play of flames from two opposite sides, or if you want to separate a room or space with a visual feature. The double-sided model can be installed within a separating wall or as a free-standing fire to divide a room. Either is a convivial way to separate two spaces within your interior.

A three-sided tunnel model is usually installed against a wall, with the three glass sides extending into the room to divide the space. This makes the fire viewable from every angle in the room. This model can also be suspended freely from the wall without a base, leaving space both below and above it.

Glass sizes of room divider models with Prestige burner:

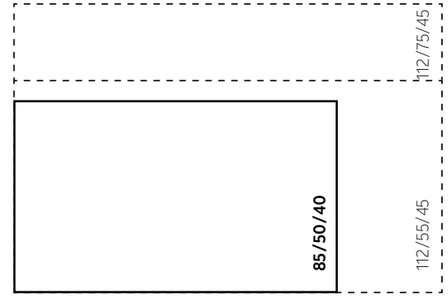

KALFIRE GP85/50R

natural gas propane bio-propane

KALFIRE GP110/59T

Glass sizes of tunnel models with Prestige burner:

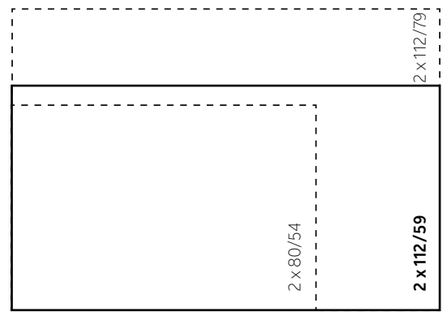

natural gas propane bio-propane

GP range

KALFIRE GP115/55R with optional side panel 75/55 left

Back panel

Back and side panel 75/55 left

Back and side panel 75/55 right

Glass sizes of room divider models with Prestige burner:

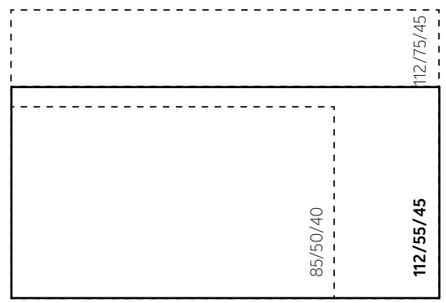

KALFIRE GP115/55R

natural gas propane bio-propane

KALFIRE GP110/79T

Glass sizes of tunnel models with Prestige burner:

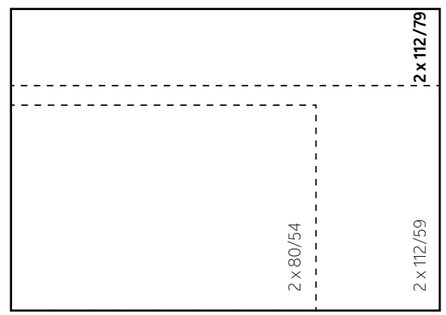

natural gas propane bio-propane

GP range

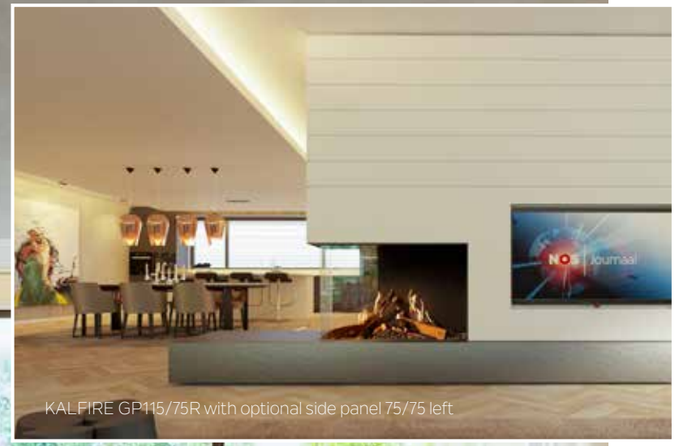
KALFIRE GP115/75R with optional side panel 75/75 left

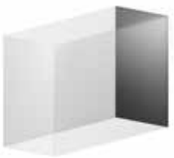
Back panel

Back and side panel 75/75 left

Back and side panel 75/75 right

Glass sizes of room divider models with Prestige burner:

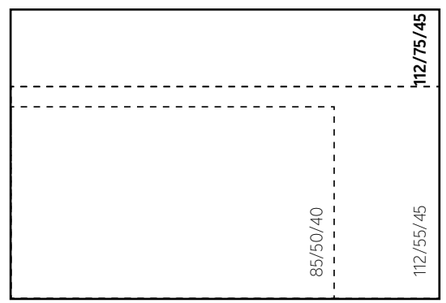

KALFIRE GP115/75R

natural gas propane bio-propane

Product overview

		Burner type: 3D burner	Burner type: Prestige burner	Hybrid function: NSG (Natural Spark Generator)	Interior: Flat	Interior: Black ceramic glass	Interior: Design	Interior: Brick effect	Interior: Boom brickwork effect	Interior: Grey clay	Anti-reflective glass	Fillings: Ceramic (burner) logs	Fillings: Ceramic log set	Fillings: Exclusive ceramic log set	Fillings: White stones	Fillings: Grey stones	Fillings: Cryptonite	Mounting trims: 4-sided, 3 cm deep, 4 mm thick	Mounting trims: 4-sided, 7 cm deep, 8 mm thick	Mounting trims: 4-sided, 10 cm deep, 8 mm thick	Mounting trims: 3 cm deep, 4 mm thick	Mounting trims: 7 cm deep, 8 mm thick	Glass sizes: Width (cm)	Glass sizes: Height (cm)	Glass sizes: Width of side glass (cm)	Ø Flue connection (mm)	Heat output (%)*	Capacity (kW)*	Energy efficiency index (EEI) (%)*	Energy efficiency class*
	Front models																												
page 40	GP60/59F		•	•	•	•	•				•	•						•	•	•	•		60	59		130/200	76	6.1	88	A
page 42	GP60/79F		•	•	•	•	•			•	•	•						•	•	•	•		60	79		130/200	76	7.9	88	A
page 44	GP75/59F		•	•	•	•	•				•	•						•	•	•	•		75	59		130/200	83	8.7	88	A
page 46	GP105/59F		•	•	•	•	•				•	•						•	•	•	•		105	59		130/200	82	8.8	88	A
page 48	GP105/79F		•	•	•	•	•			•	•	•						•	•	•	•		105	79		130/200	82	11.4	92	A
page 50	G60/48F	•			•	•	•				•		•	•	•	•	•	•	•	•	•		60	48		100/150	85	5.8	89	A
page 52	G80/48F	•			•	•	•				•		•	•	•	•	•	•	•	•	•		80	48		130/200	83	6.6	89	A
page 54	G100/41F	•			•	•	•				•		•	•	•	•	•	•	•	•	•		100	41		130/200	83	7.4	90	A
page 56	G120/41F	•			•	•	•				•		•	•	•	•	•	•	•	•	•		120	41		130/200	85	8.3	90	A
page 58	G160/41F	•			•	•	•				•		•	•	•	•	•	•	•	•	•		160	41		130/200	82	10.8	89	A
	Corner models																												
page 62	GP65/55C		•	•	•	•	•				•	•						•	•	•	•		65	55	31	130/200	76	6.1	88	A
page 64	GP65/75C		•	•	•	•	•				•	•						•	•	•	•		65	75	31	130/200	76	7.9	88	A
page 66	GP80/55C		•	•	•	•	•				•	•						•	•	•	•		80	55	31	130/200	83	8.7	88	A
page 68	GP110/55C		•	•	•	•	•				•	•						•	•	•	•		110	55	36	130/200	82	8.8	88	A
page 70	GP110/75C		•	•	•	•	•				•	•						•	•	•	•		110	75	36	130/200	82	11.4	92	A
page 72	G65/44C	•			•	•	•				•		•	•	•	•	•	•	•	•	•		65	44	26	100/150	85	5.8	89	A
page 74	G85/44C	•			•	•	•				•		•	•	•	•	•	•	•	•	•		85	48	30	130/200	83	6.6	89	A
page 76	G105/37C	•			•	•	•				•		•	•	•	•	•	•	•	•	•		105	37	27	130/200	83	7.4	90	A
page 78	G125/37C	•			•	•	•				•		•	•	•	•	•	•	•	•	•		125	37	27	130/200	85	8.3	90	A
page 80	G165/37C	•			•	•	•				•		•	•	•	•	•	•	•	•	•		165	37	27	130/200	82	10.8	89	A
	3-sided models																												
page 82	GP70/55S		•	•	•	•	•					•						•	•	•	•		65	55	31	130/200	76	6.1	88	A
page 84	GP70/75S		•	•	•	•	•					•						•	•	•	•		65	75	31	130/200	76	7.9	88	A
page 86	GP85/55S		•	•	•	•	•					•						•	•	•	•		80	55	31	130/200	83	8.7	88	A
page 88	GP115/55S		•	•	•	•	•					•						•	•	•	•		110	55	36	130/200	82	8.8	88	A
page 90	GP115/75S		•	•	•	•	•					•						•	•	•	•		110	75	36	130/200	82	11.4	92	A
page 92	G70/44S	•			•	•	•						•	•	•	•	•	•	•	•	•		65	44	26	100/150	85	5.8	89	A
page 94	G90/44S	•			•	•	•						•	•	•	•	•	•	•	•	•		85	48	30	130/200	83	6.6	89	A
page 96	G110/37S	•			•	•	•						•	•	•	•	•	•	•	•	•		105	37	27	130/200	83	7.4	90	A
page 98	G130/37S	•			•	•	•						•	•	•	•	•	•	•	•	•		125	37	27	130/200	85	8.3	90	A
page 100	G170/37S	•			•	•	•						•	•	•	•	•	•	•	•	•		165	37	27	130/200	82	10.8	89	A
	Tunnel / Room divider models																												
page 102	GP80/54T	•		•	•	•	•			•		•						•	•	•			80	54		130/200	79	7,9	88	A
page 104	GP85/50R	•		•	•	•	•					•									•	•	85	50	40	130/200	79	7,9	88	A
page 106	GP110/59T	•		•	•	•	•			•		•						•	•	•			112	59		130/200	70	9,4	84	B
page 108	GP115/55R	•		•	•	•	•					•									•	•	112	55	45	130/200	70	9,4	84	B
page 110	GP110/79T	•		•	•	•	•			•		•						•	•	•			112	79		130/200	73	10,1	72	B
page 112	GP115/75R	•		•	•	•	•					•									•	•	112	55	45	130/200	73	10,1	72	B

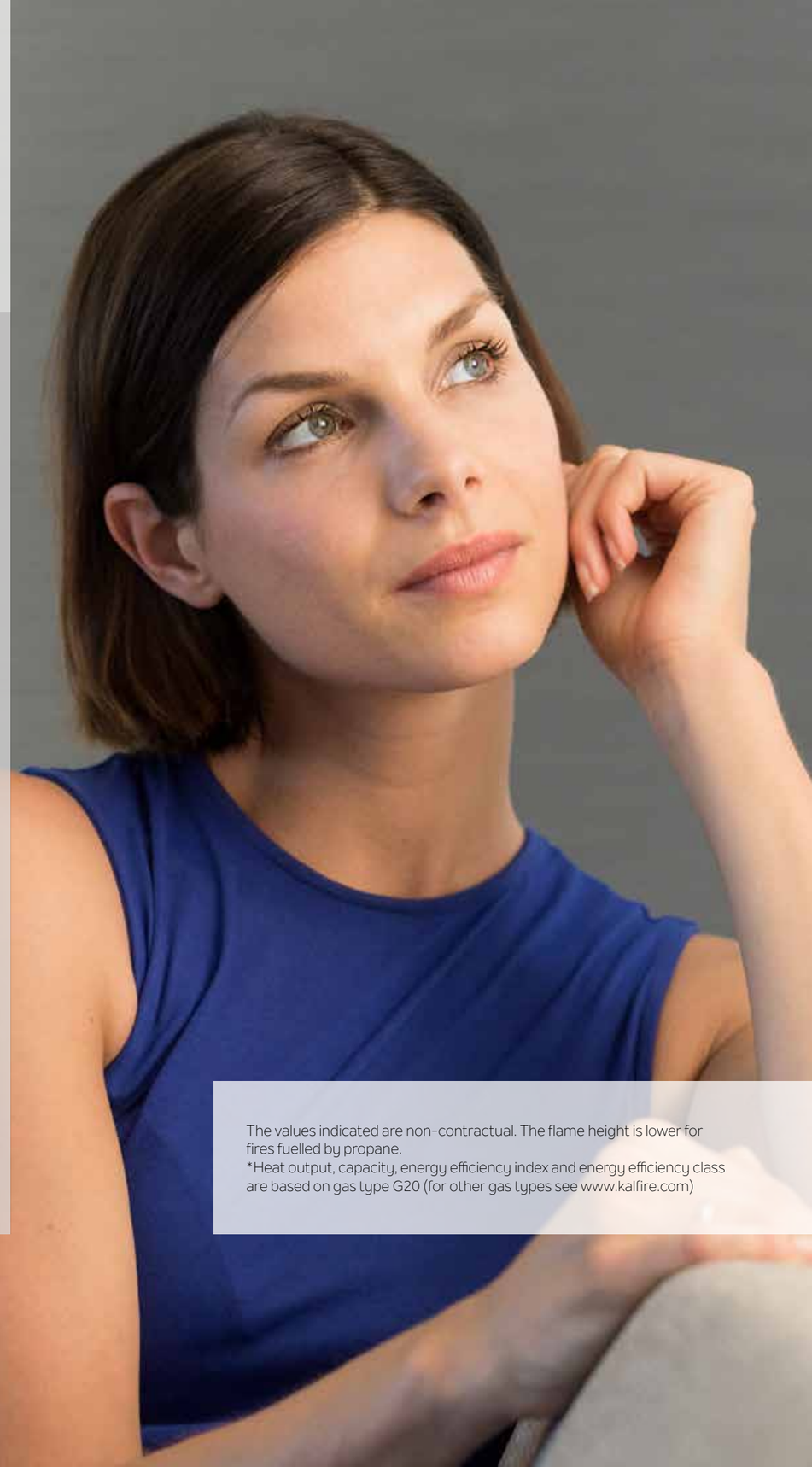

The values indicated are non-contractual. The flame height is lower for fires fuelled by propane.
*Heat output, capacity, energy efficiency index and energy efficiency class are based on gas type G20 (for other gas types see www.kalfire.com)

Front models

Kalfire GP range

Kalfire GP60/59F

page 40

Front

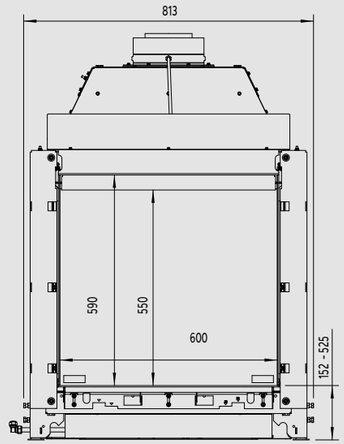

Top

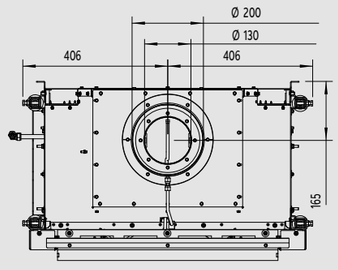

Side

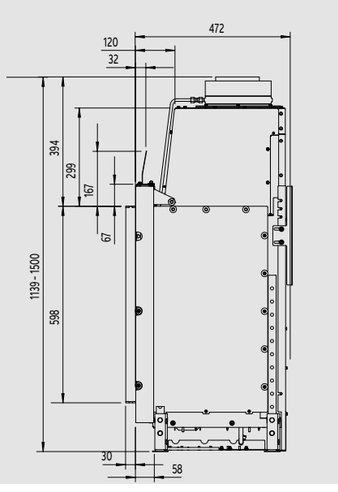

Kalfire GP60/79F

page 42

Front

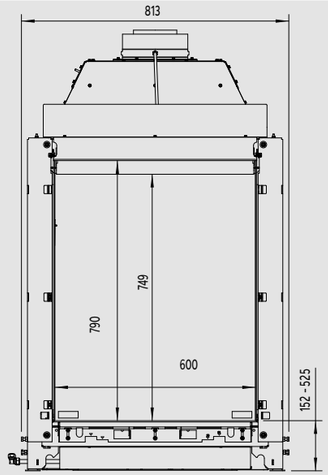

Top

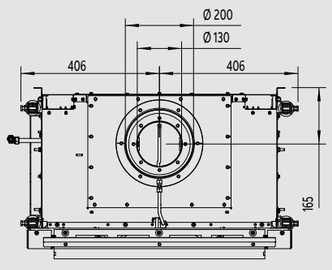

Side

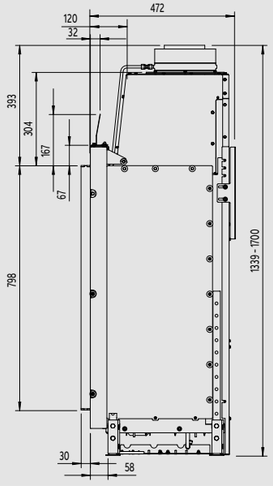

Kalfire GP75/59F

page 44

Front

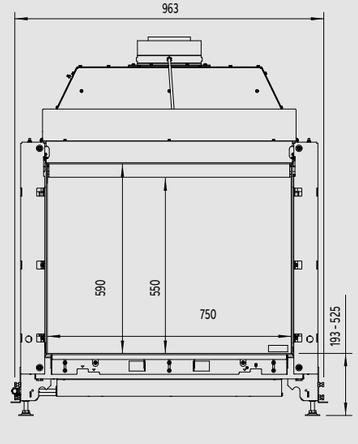

Top

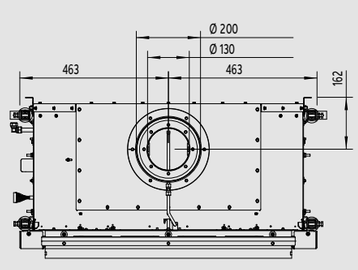

Side

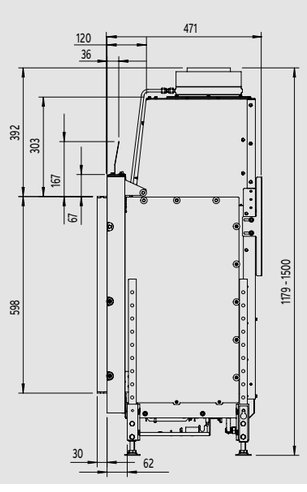

Kalfire GP105/59F

page 46

Front

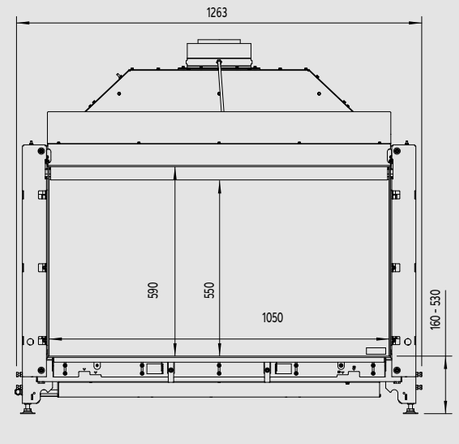

Top

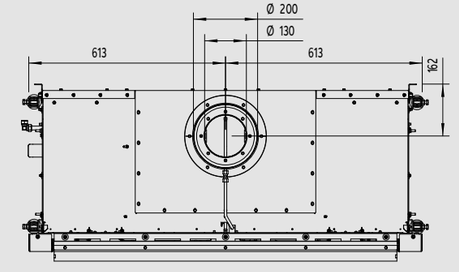

Side

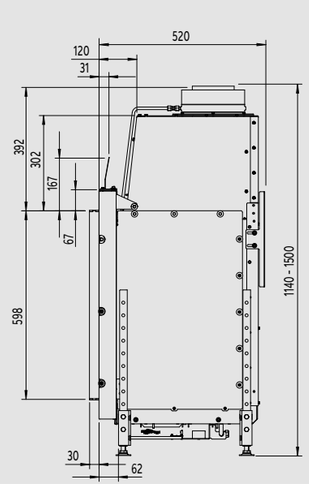

Front models
Kalfire GP range

Kalfire GP105/79F

page 48

Front

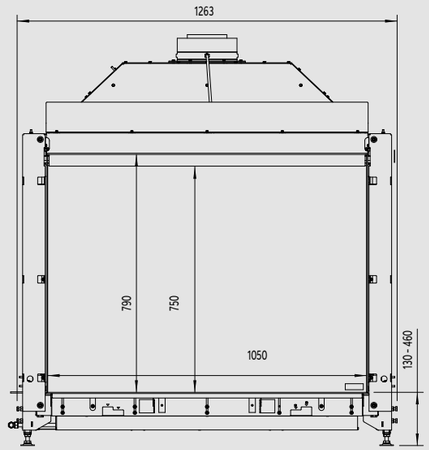

Top

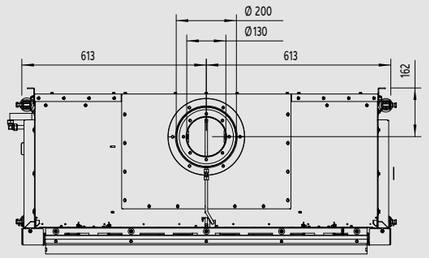

Side

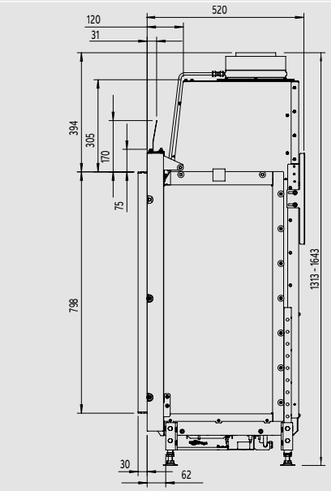

Front models
Kalfire G range

Kalfire G60/48F

page 50

Front

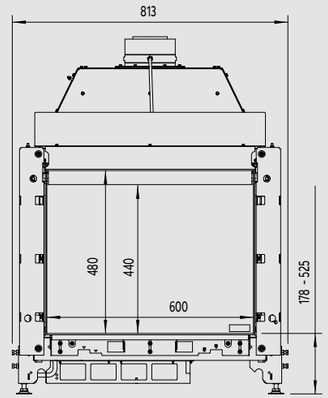

Top

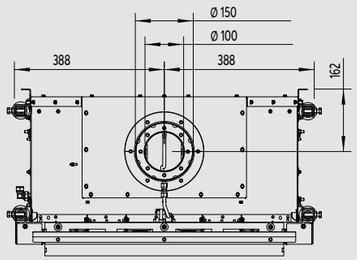

Side

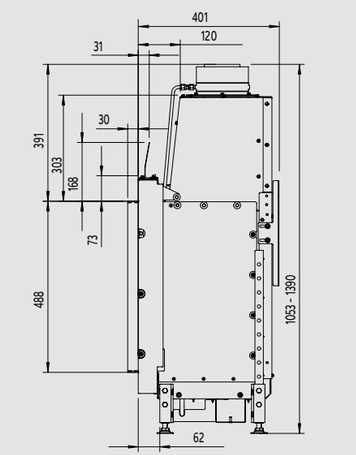

Kalfire G80/48F

page 52

Front

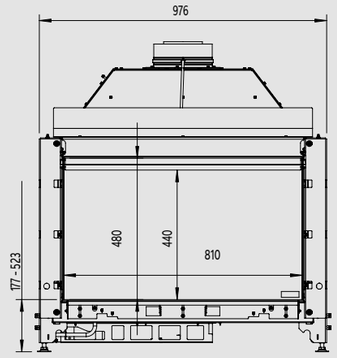

Top

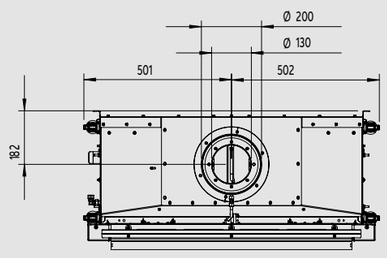

Side

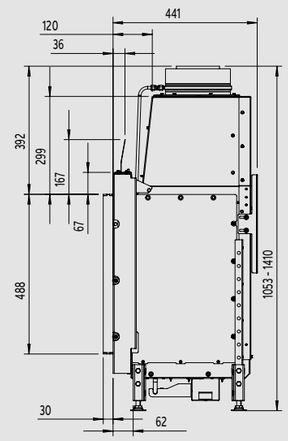

Kalfire G100/41F

page 54

Front

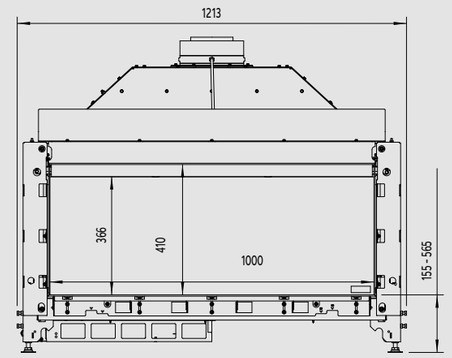

Top

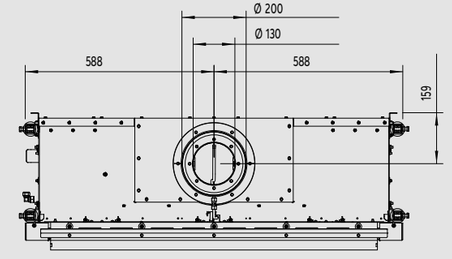

Side

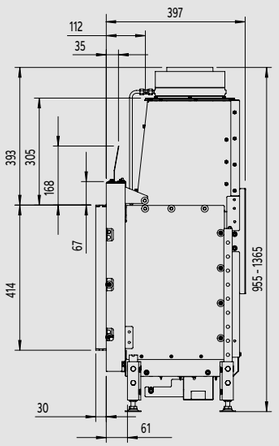

Front models

Kalfire G range

Kalfire G120/41F

page 56

Front

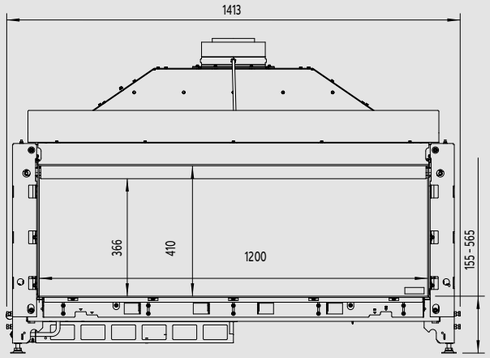

Top

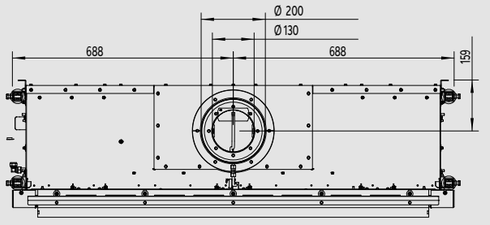

Side

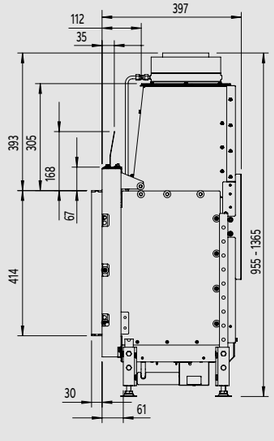

Kalfire G160/41F

page 58

Front

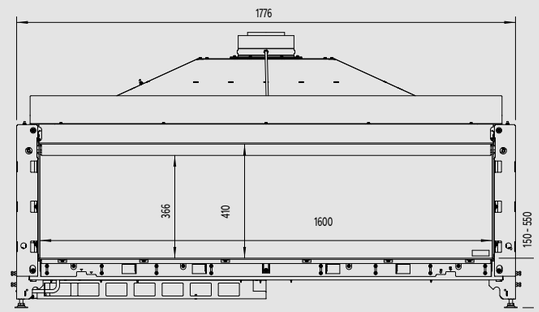

Top

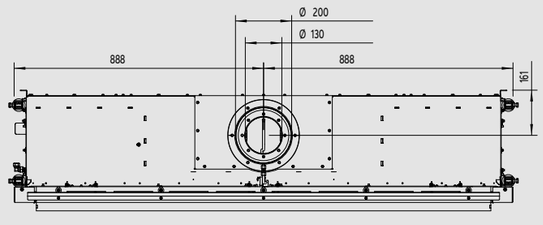

Side

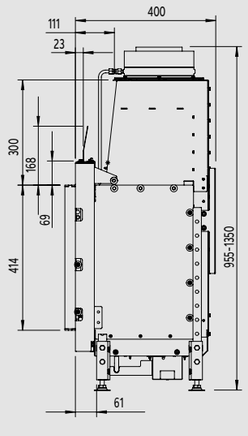

Corner models

Kalfire GP range

Kalfire GP65/55CL

page 62

Front

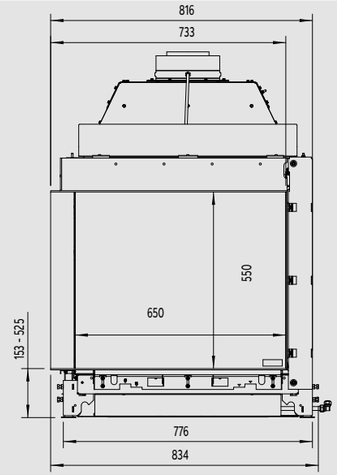

Top

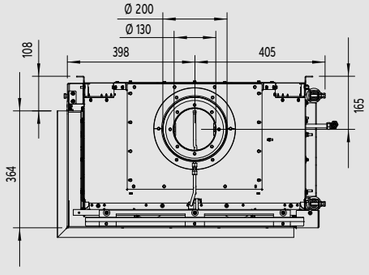

Side

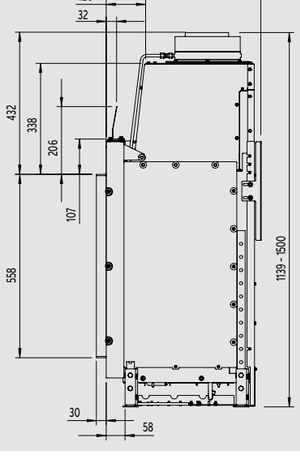

Kalfire GP65/55CR

Front

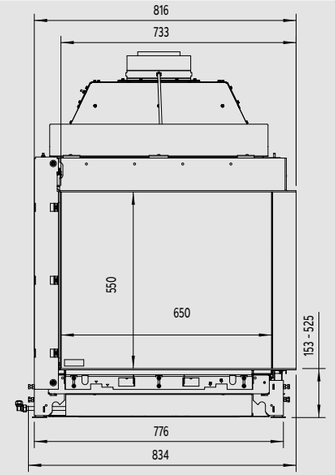

Top

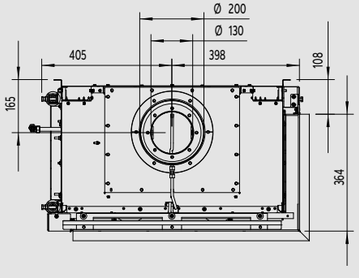

Side

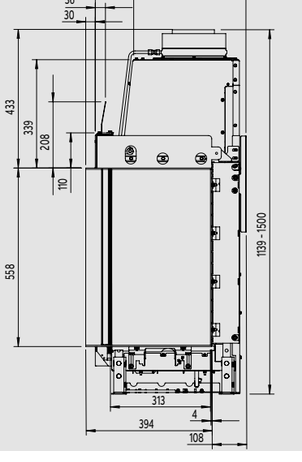

Corner models

Kalfire GP range

Kalfire GP65/75CL

page 64

Front

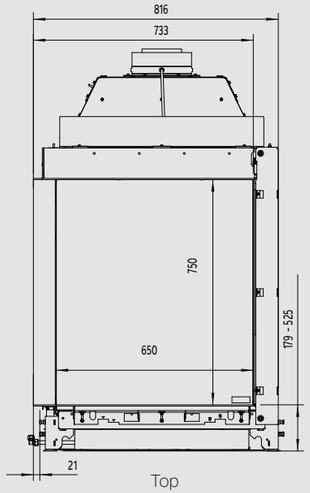

Top

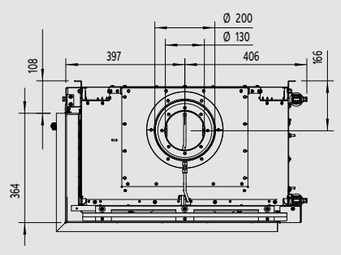

Side

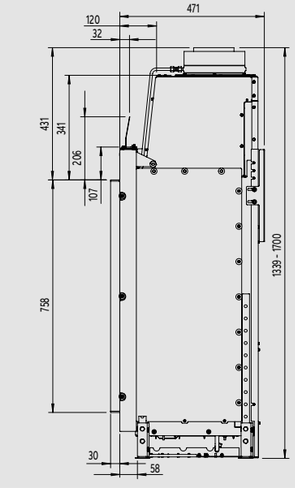

Kalfire GP65/75CR

Front

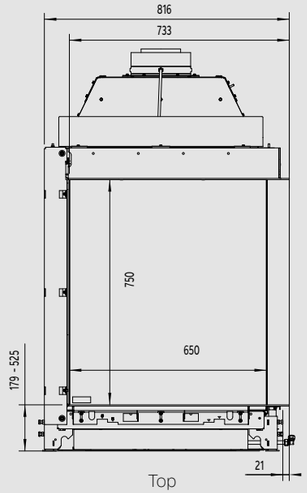

Top

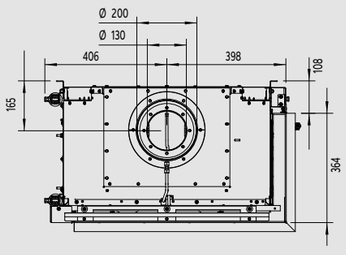

Side

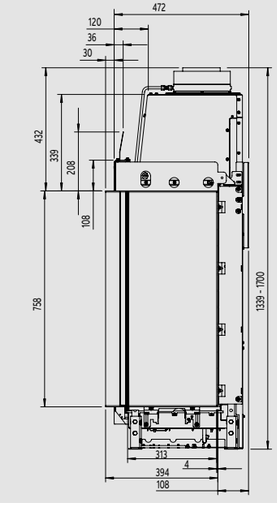

Kalfire GP80/55CL

page 66

Front

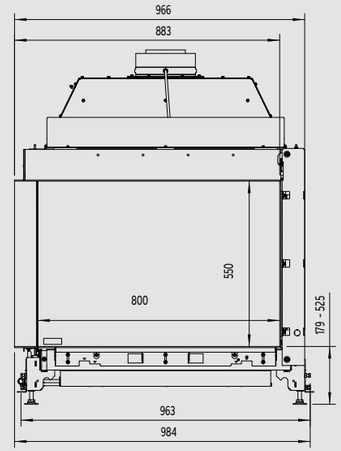

Top

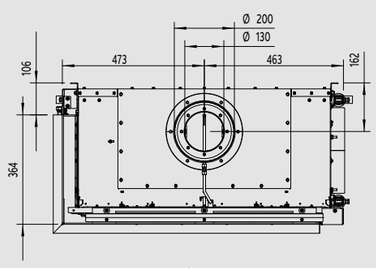

Side

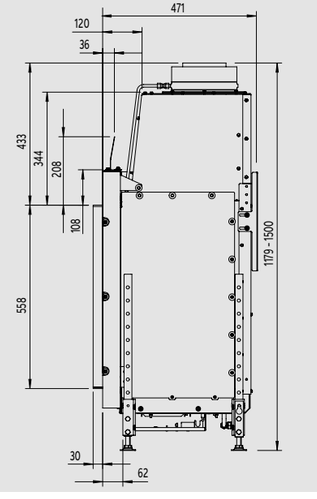

Kalfire GP80/55CR

Front

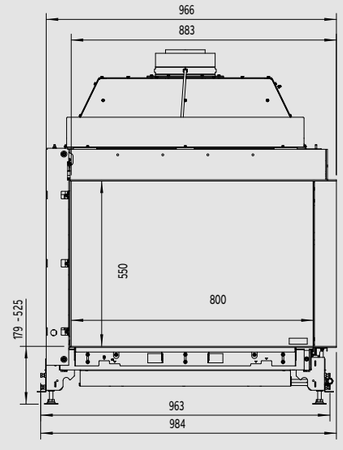

Top

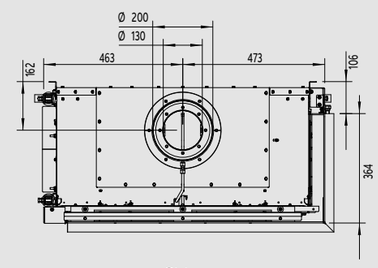

Side

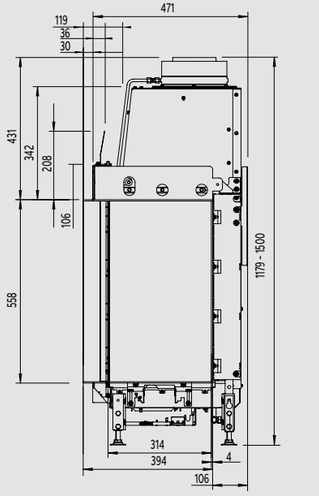

Corner models

Kalfire GP range

Kalfire GP110/55CL

page 68

Front

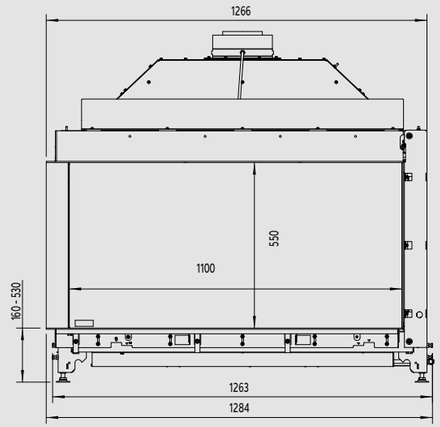

Top

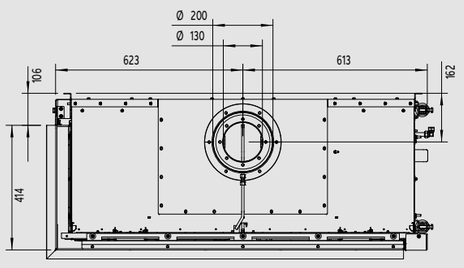

Side

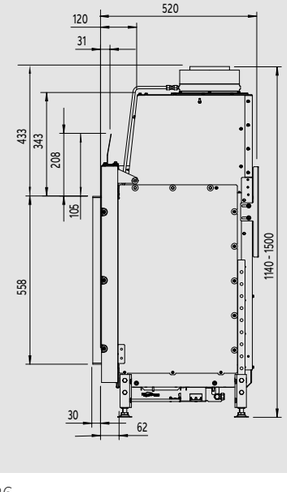

Kalfire GP110/55CR

Front

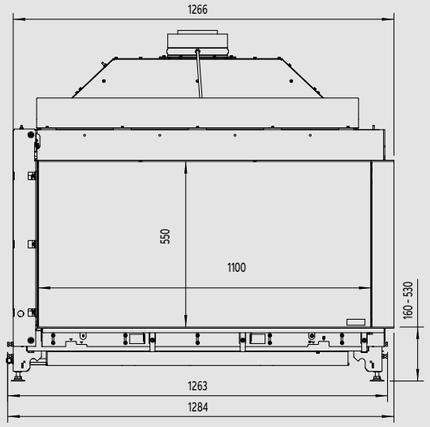

Top

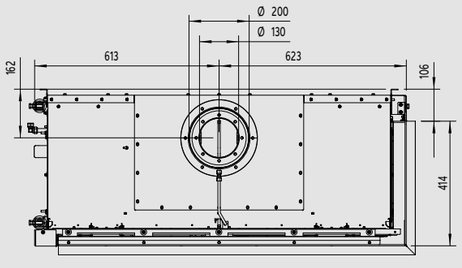

Side

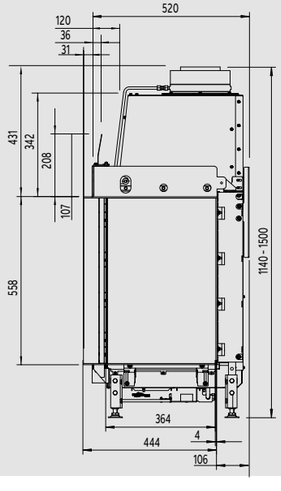

Kalfire GP110/75CL

page 70

Front

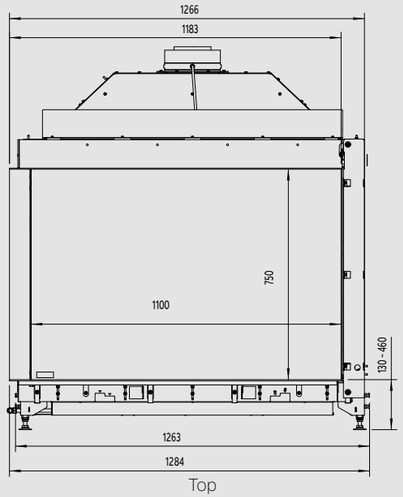

Top

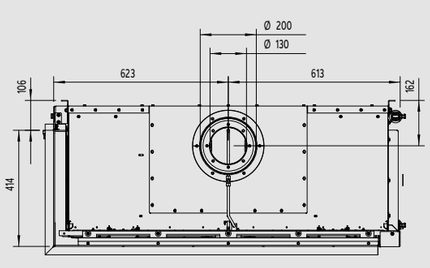

Side

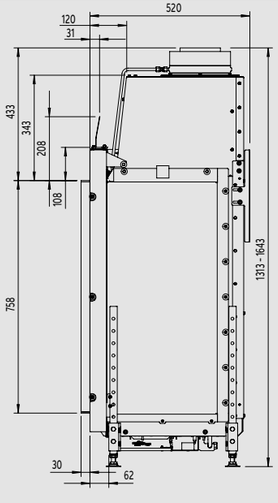

Kalfire GP110/75CR

Front

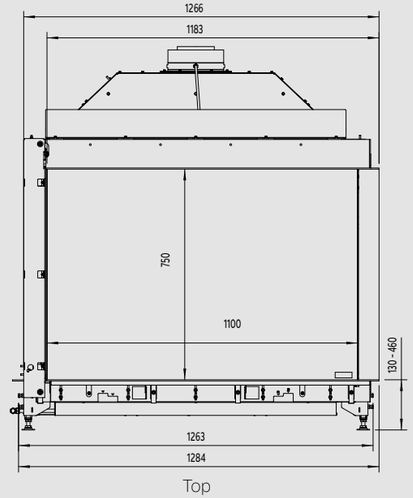

Top

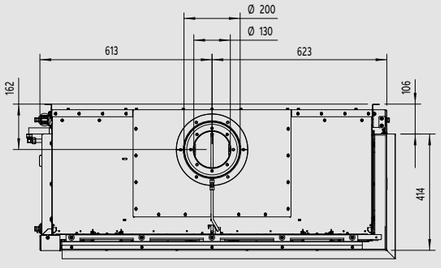

Side

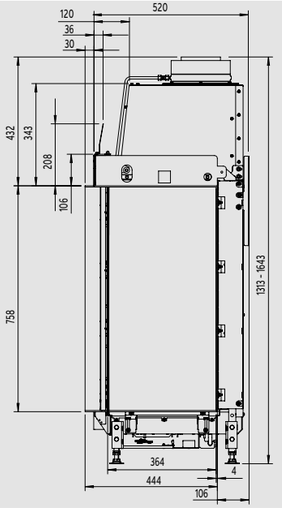

Corner models

Kalfire G range

Kalfire G65/44CL

Front

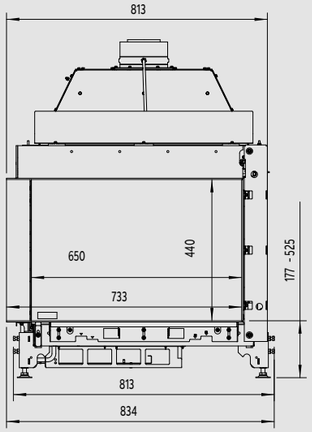

Top

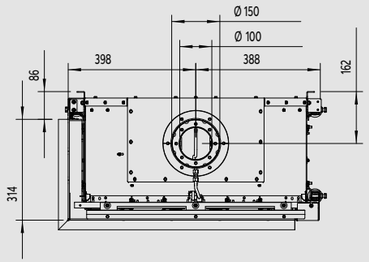

Side

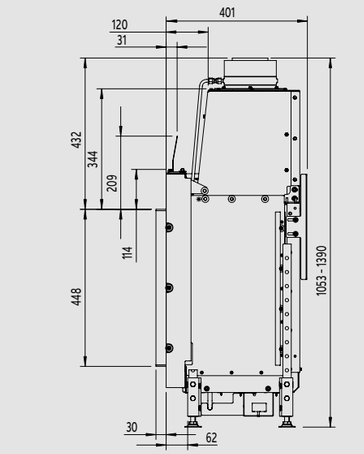

Kalfire G65/44CR

page 72

Front

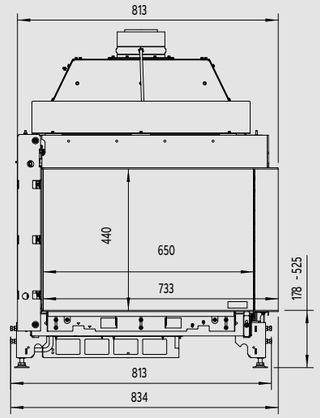

Top

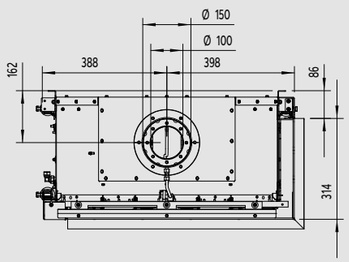

Side

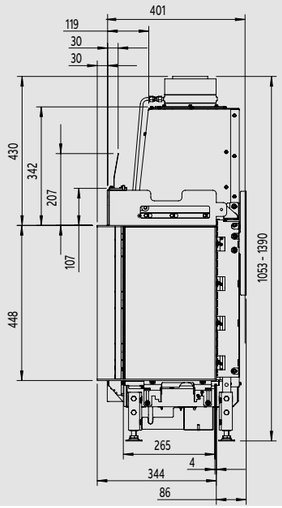

Kalfire G85/44CL

page 74

Front

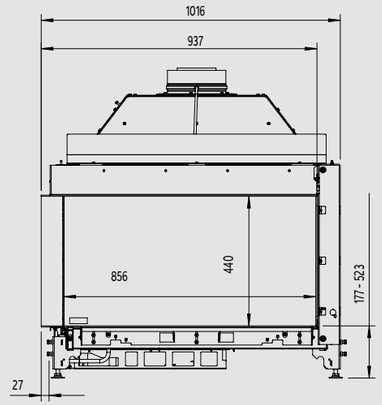

Top

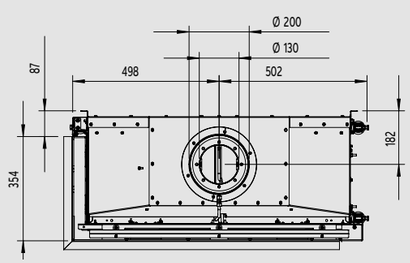

Side

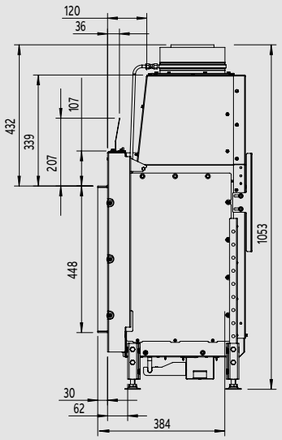

Kalfire G85/44CR

Front

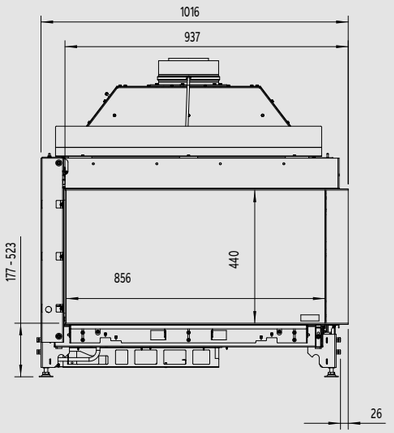

Top

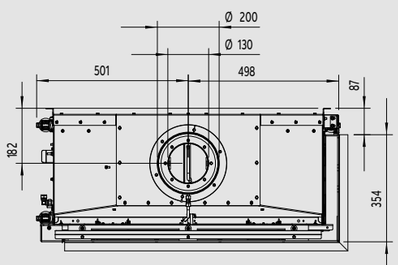

Side

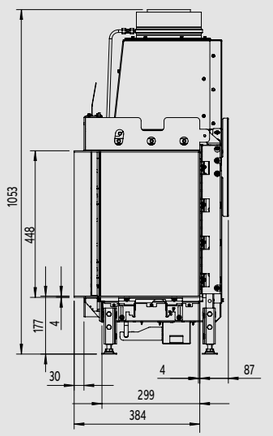

Corner models

Kalfire G range

Kalfire G105/37CL

page 76

Front

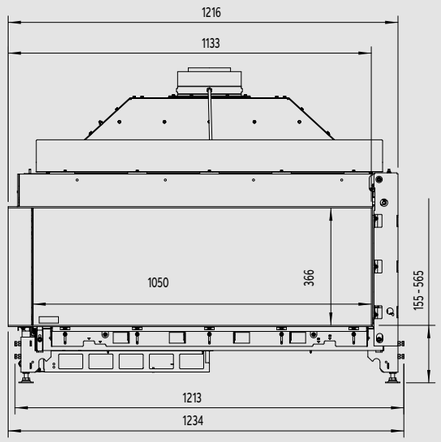

Top

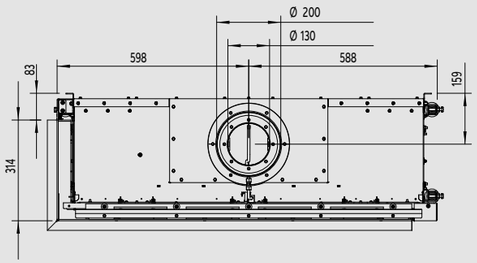

Side

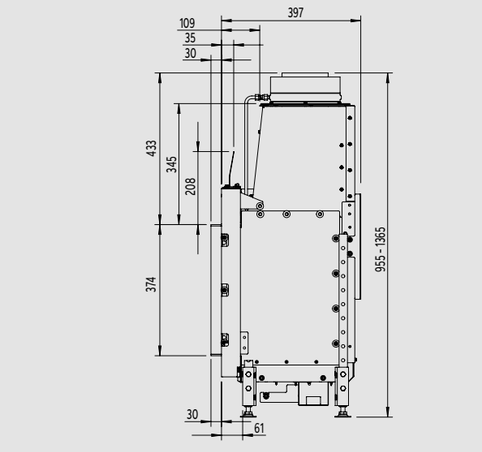

Kalfire G105/37CR

Front

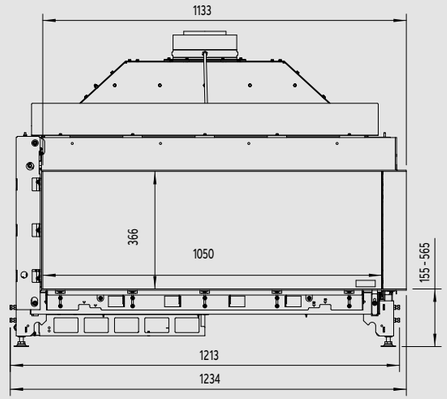

Top

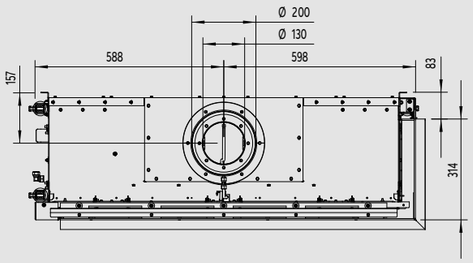

Side

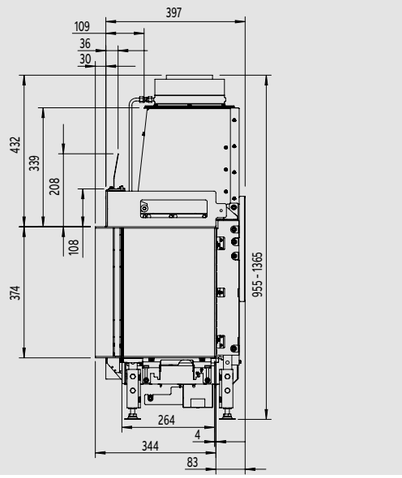

Kalfire G125/37CL

page 78

Front

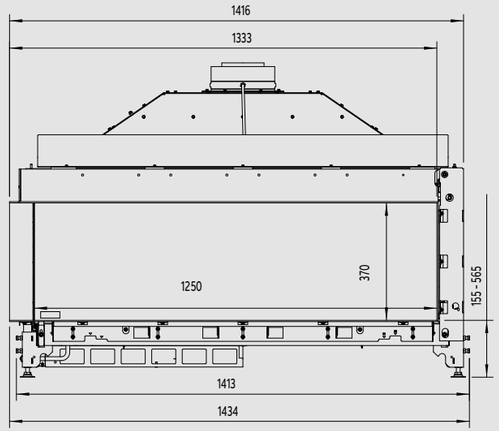

Top

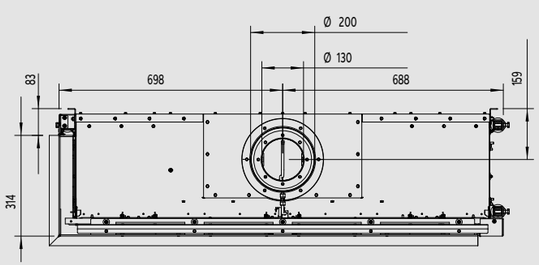

Side

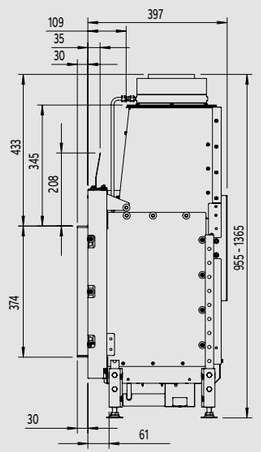

Kalfire G125/37CR

Front

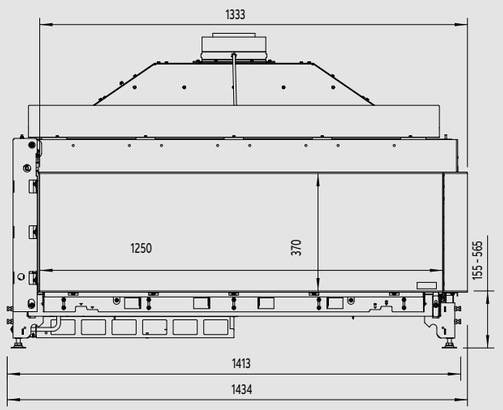

Top

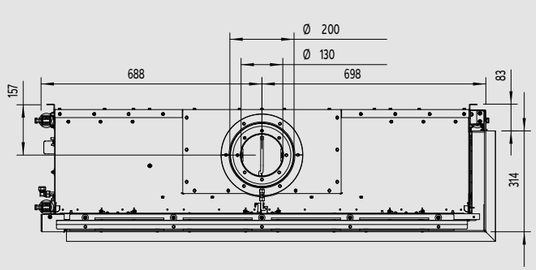

Side

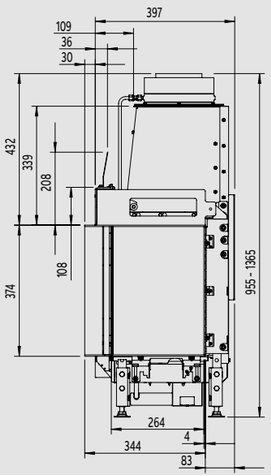

Corner models

Kalfire G range

Kalfire G165/37CL

Front

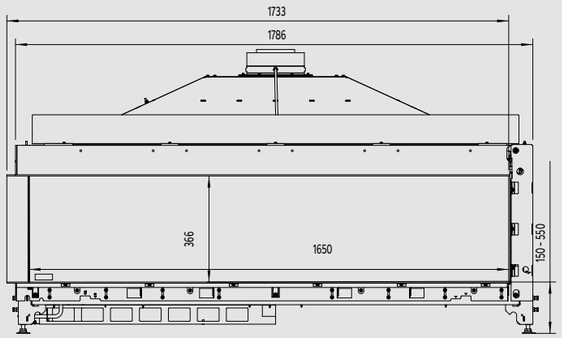

Top

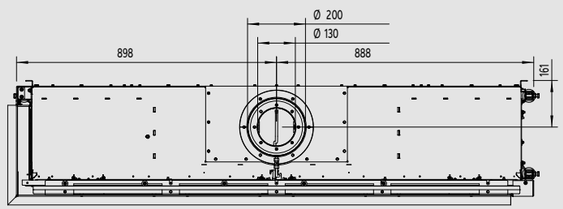

Side

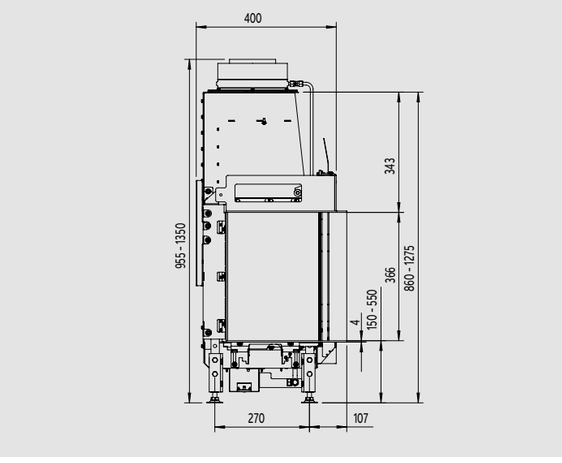

Kalfire G165/37CR

page 80

Front

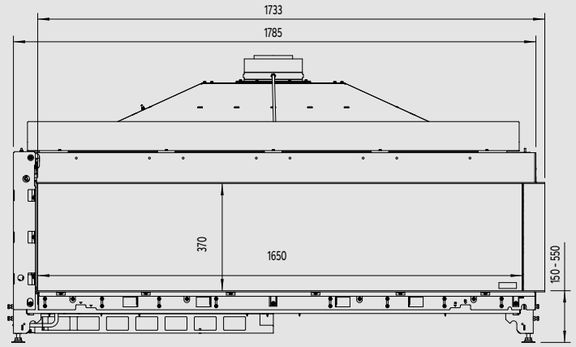

Top

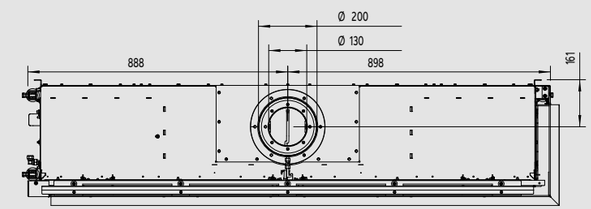

Side

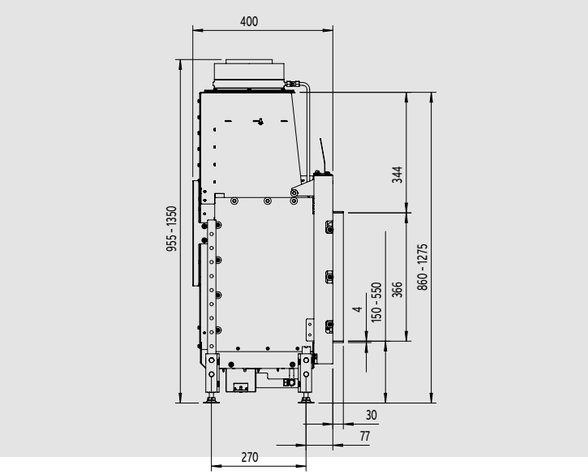

3-sided models

Kalfire GP range

Kalfire GP70/55S

page 82

Front

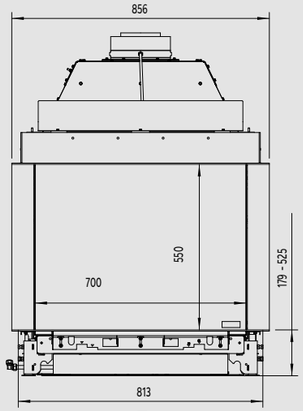

Top

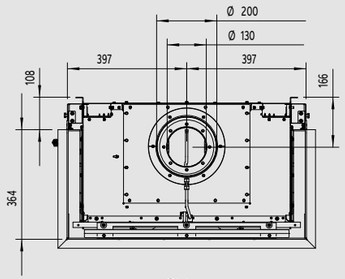

Side

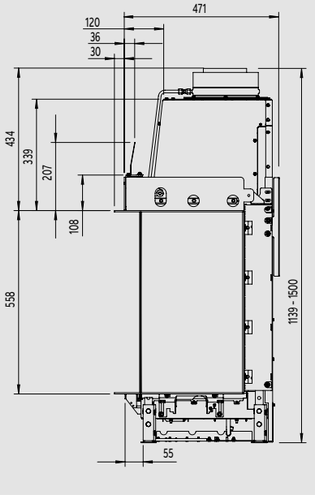

Kalfire GP70/75S

page 84

Front

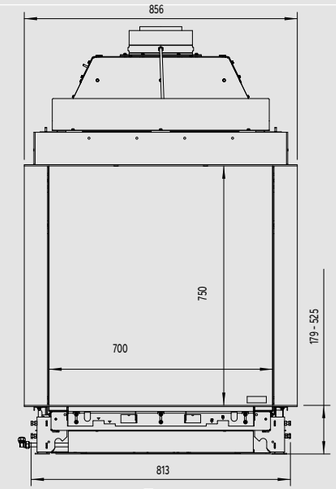

Top

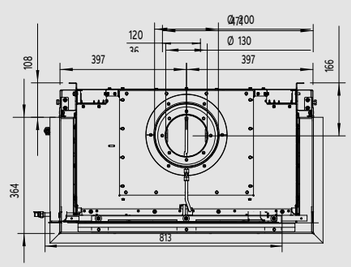

Side

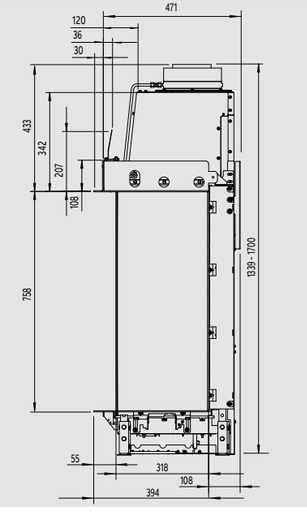

3-sided models

Kalfire GP range

Kalfire GP85/55S

page 86

Front

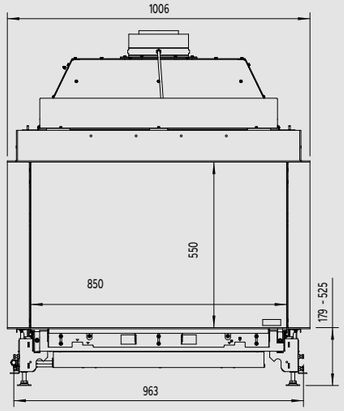

Top

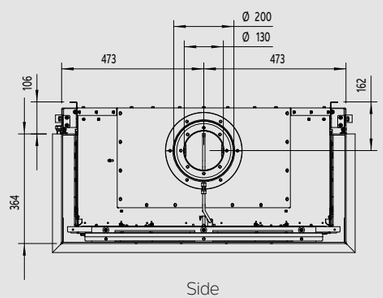

Side

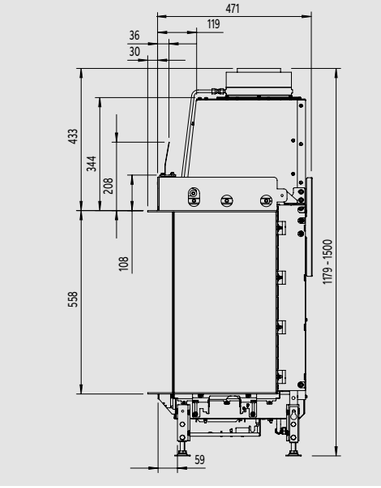

Kalfire GP115/55S

page 88

Front

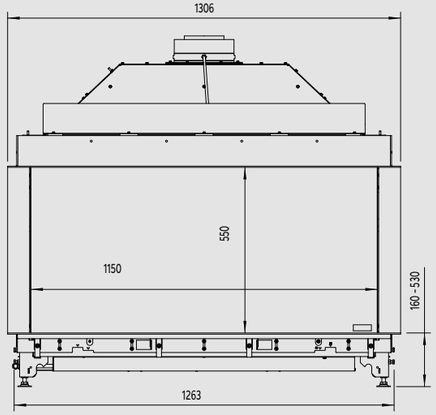

Top

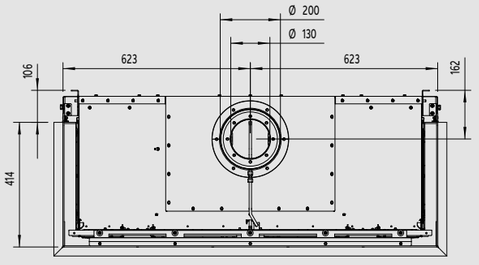

Side

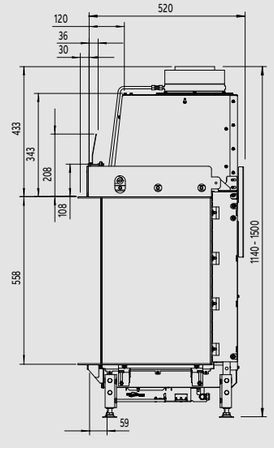

Kalfire GP115/75S

page 90

Front

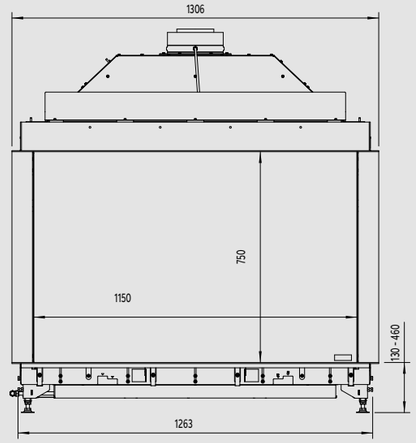

Top

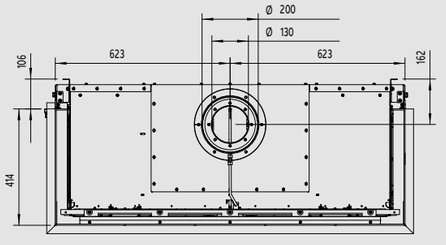

Side

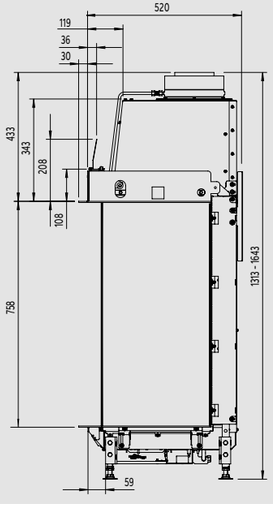

3-sided models

Kalfire G range

Kalfire G70/44S

page 92

Front

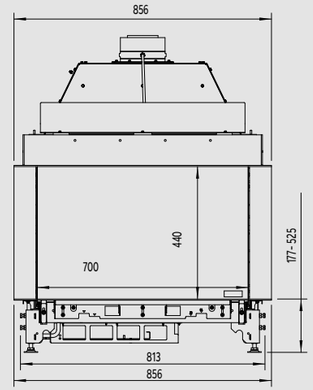

Top

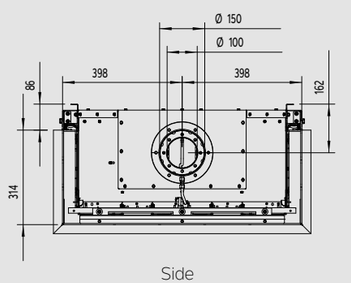

Side

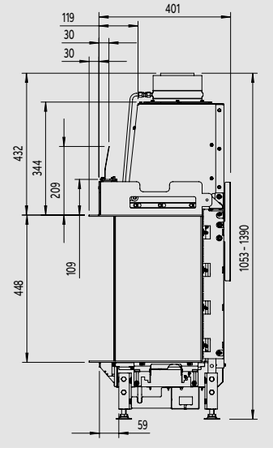

3-sided models

Kalfire G range

Kalfire G90/44S

page 94

Front

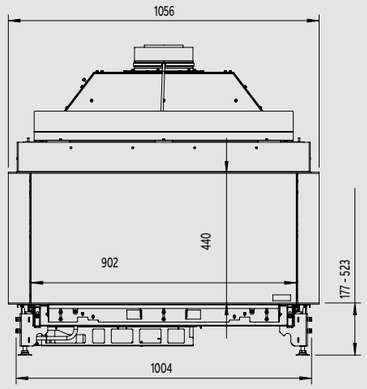

Top

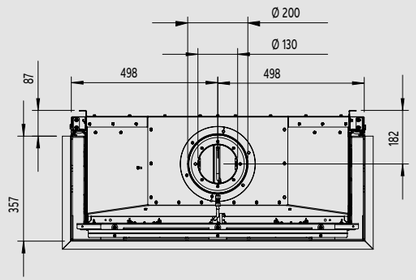

Side

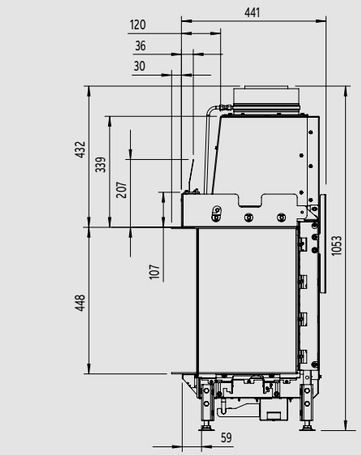

Kalfire G110/37S

page 96

Front

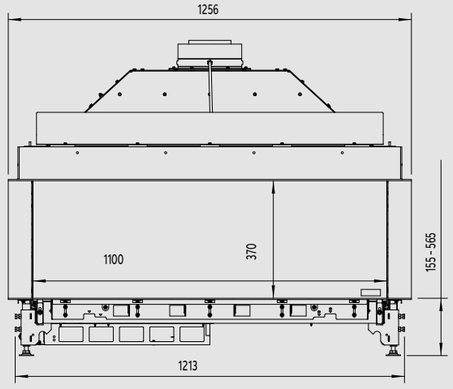

Top

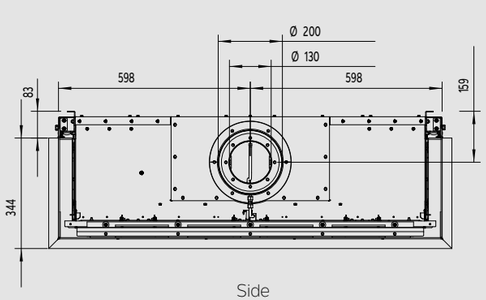

Side

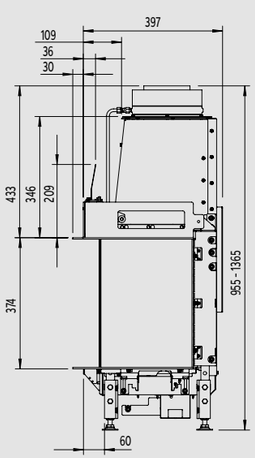

Kalfire G130/37S

page 98

Front

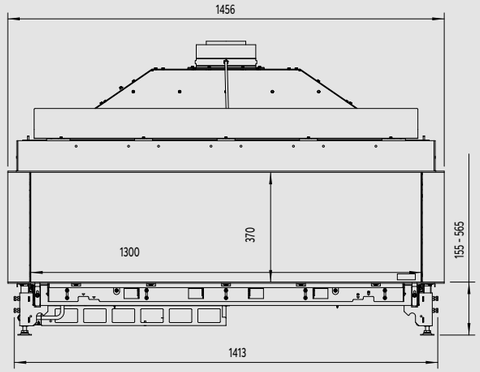

Top

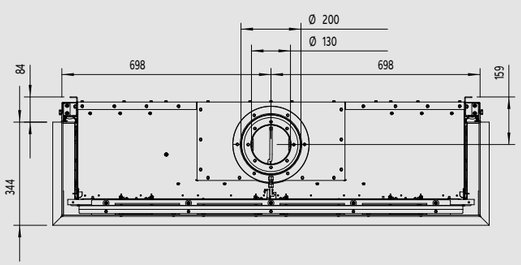

Side

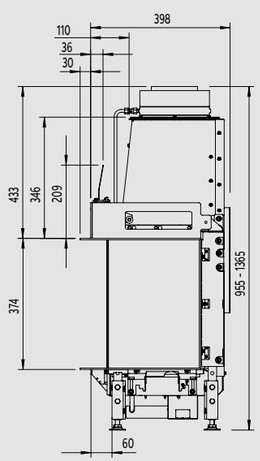

Kalfire G170/37S

page 100

Front

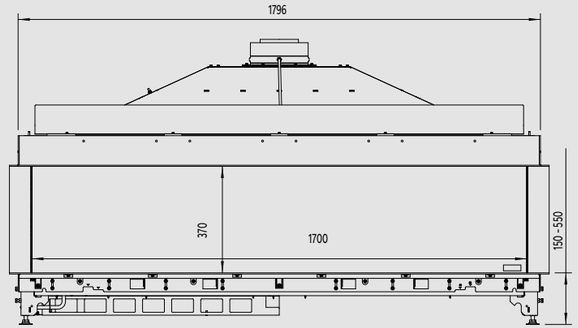

Top

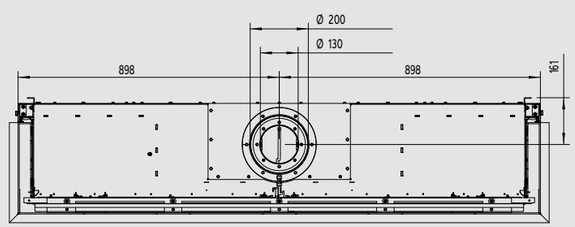

Side

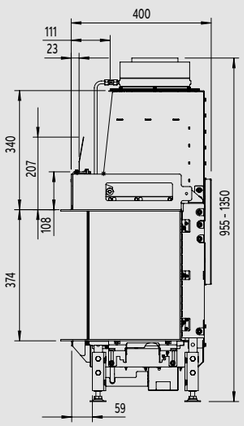

Tunnel/Room divider models

Kalfire GP range

Kalfire GP80/54T
page 102

Kalfire GP85/50R
page 104

Kalfire GP110/59T
page 106

Kalfire GP115/55R
page 108

Front

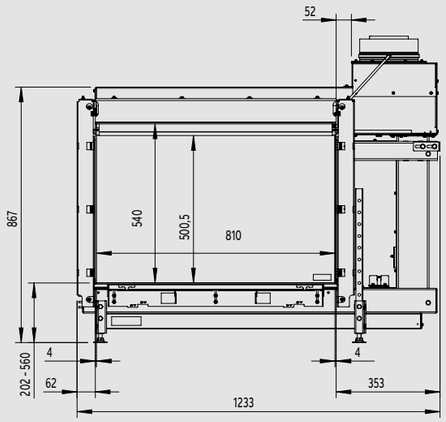

Top

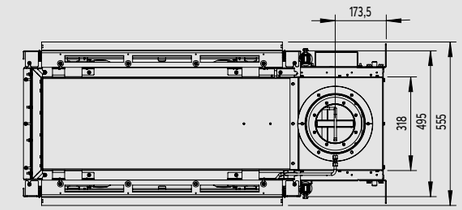

Side

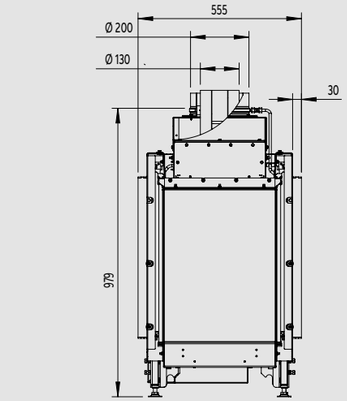

Front

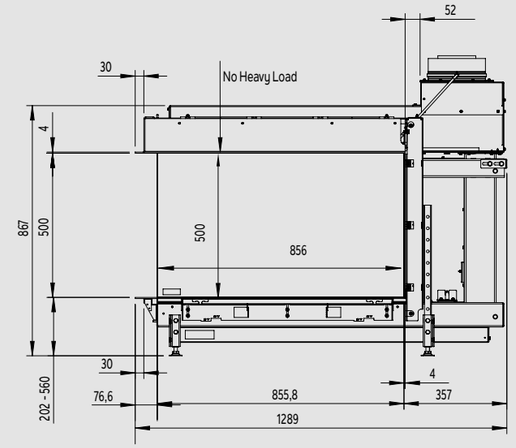

Top

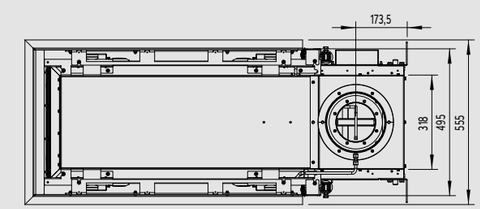

Side

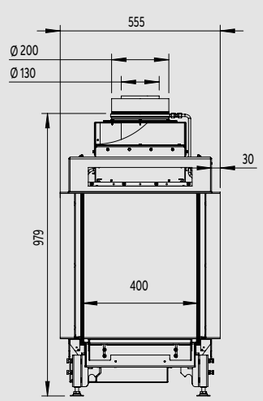

Front

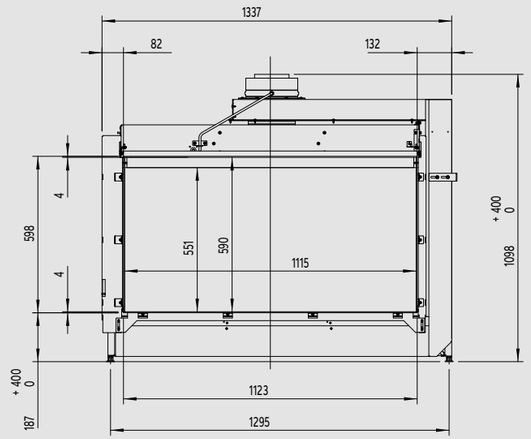

Top

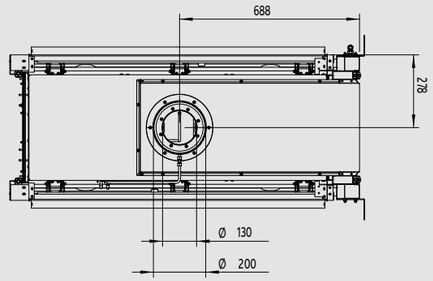

Side

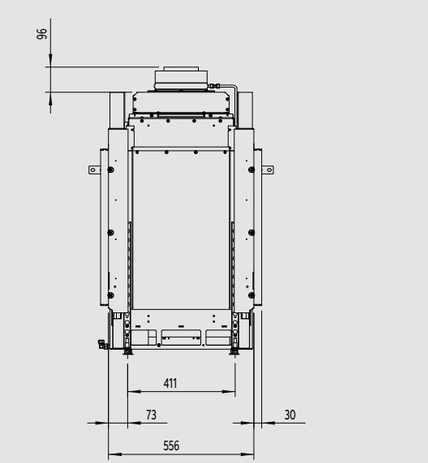

Front

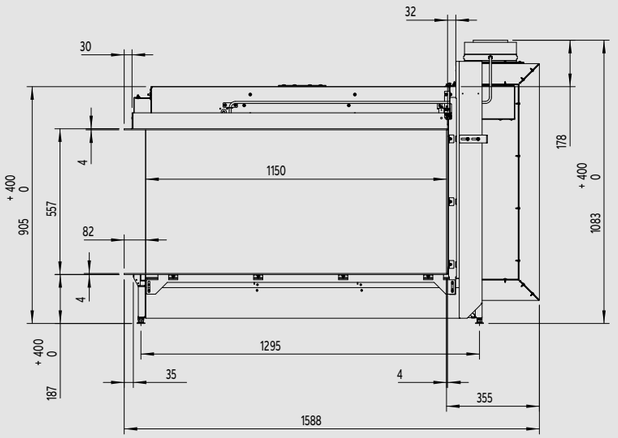

Top

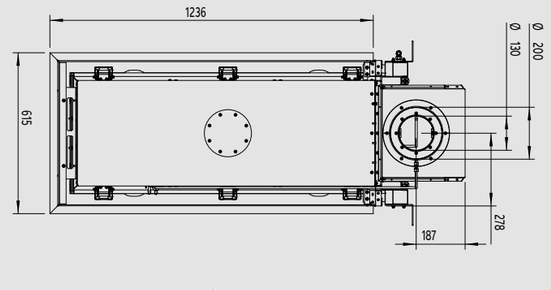

Side

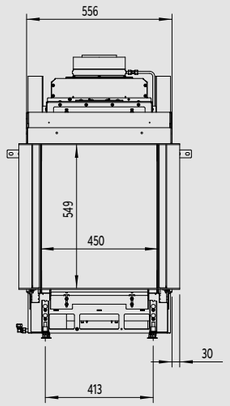

Tunnel/Room divider models

Kalfire GP range

Kalfire GP110/79T
page 110

Kalfire GP115/75R
page 112

Front

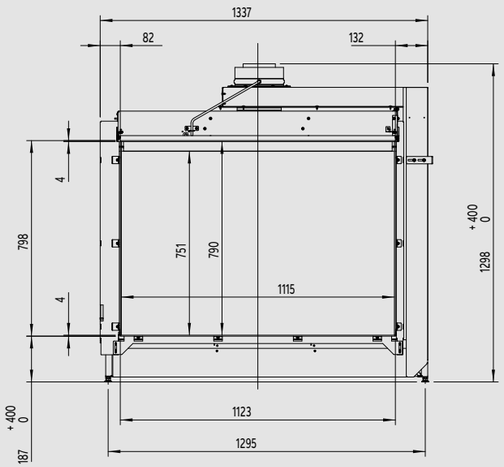

Top

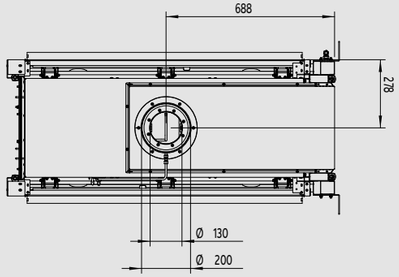

Side

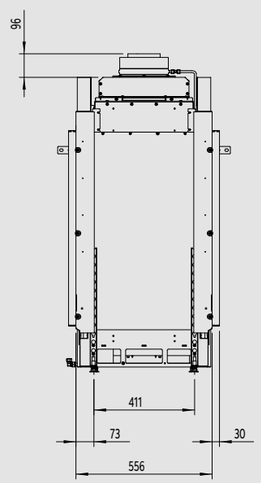

Front

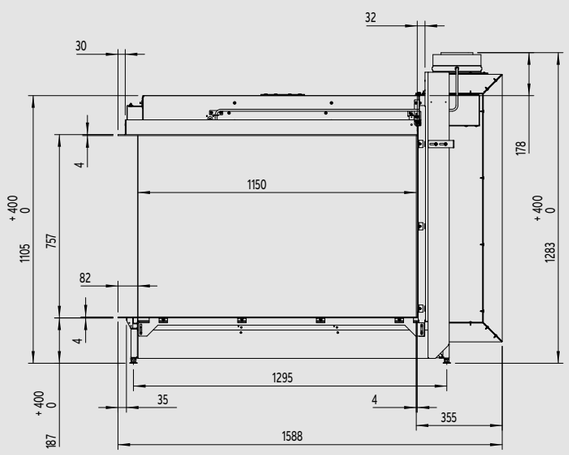

Top

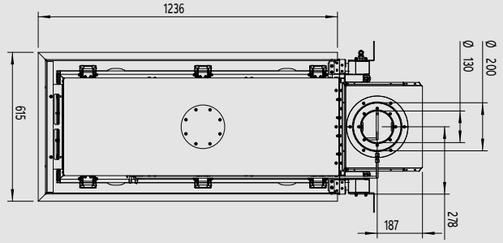

Side

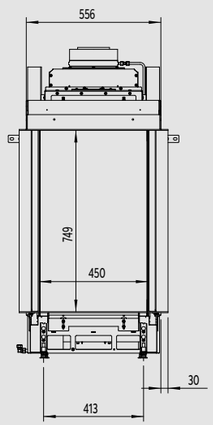

DON'T COMPROMISE.

DON'T COMPROMISE.

KALFIRE
FIREPLACES

Geloërveldweg 21
5951 DH Belfeld, NL

info@kalfire.com
KALFIRE.COM

03-2020